EVAL-M3-IM564 User Manual

iMOTION™ Modular Application Design Kit

About this document

Scope and purpose

This user manual provides an overview of the Evaluation board EVAL-M3-IM564 including its main features, key data, pin assignments and mechanical dimensions.

EVAL-M3-IM564 is an Evaluation board as part of the iMOTION™ Modular Application Design Kit. This power board includes a PFC integrated 3-phase CIPOS™ Mini Intelligent Power Module (IPM) for motor drive application. In combination with the control board equipped with the M3 30pin interface connector such as EVAL-M3-102T, it features and demonstrates Infineon's CIPOS™ Mini IPM technology and Advanced Motion Control Engine (MCE 2.0) technology for permanent magnet motors drive over the full speed range.

The inverter section has 600V of voltage and 20A of current rating, and the PFC section has 600V of voltage and 20A of current rating. It is optimized to major home appliances like air conditioners and low power motor dirve application with high frequency switching operation of power factor correction.

This Evaluation board EVAL-M3-IM564 was developed to support customers during their first steps designing application with CIPOS™ Mini PFC integrated IPM IM564-X6D/IM564-X6DS and running any permanent magnet motor via sensorless sinusoidal control.

Intended audience

This user manual is intended for all technical specialists who know motor control and high power electronics converter and this board is intended to be used under laboratory conditions.

Table of contents

About this document **1**
Table of contents **1**
1 Safety precautions **4**
2 Introduction **5**
3 EVAL-M3-IM564 main features **7**
3.1 EVAL-M3- IM564 board specifications 8
3.2 Pin assignment 11
4 Getting Started with EVAL-M3-IM564 ..... **13**
4.1 Setting up the system 13
4.2 iMOTION™ development tools and software 15
4.2.1 MCEWizard setup overview 15
4.2.2 MCEDesigner setup overview 18
5 Hardware description of EVAL-M3-IM564 ..... **20**
5.1 Boost PFC section using CIPOS™ mini IPM 20
5.1.1 AC Voltage sensing and MCEWizard configuration 20
5.1.2 Hardware Modification for AC Voltage sensing to work with IRMCF188 21
5.1.3 PFC External Current feedback configuration and calculation 22
5.1.4 PFC Overcurrent protection circuit and PFC Gatekill configuration 23

Table of contents

5.2 Inverter section using CIPOS™ mini IPM 24
5.2.1 DC bus sensing and MCEWizard configuration 25
5.2.2 Motor External Current feedback configuration and calculation 26
5.2.3 Inverter Overcurrent protection and Motor Gatekill configuration 27
5.3 Thermistor/NTC Characteristics and protection calculation 28
5.3.1 CIPOS™ Internal NTC – Thermistor Characteristics 28
5.3.2 Overtemperature Hardware Protection Circuit 30
5.3.3 NTC shutdown value calculation and configuration 30
5.4 System thermal resistance testing 31
5.4.1 Heatsink thermal resistance 31
5.4.2 System power output capability 32
5.5 Auxiliary power supply 33
5.6 Schematics for EVAL-M3- IM564 34
5.7 PCB Layout for EVAL-M3- IM564 36
6 Bill of material 40
7 Reference 45
Revision history 46

Attention: ***The Evaluation Boards and Reference Boards as well as the information in this document are solely intended to support designers of applications in evaluating the use of products from Infineon Technologies for their intended applications.***

Environmental conditions have been considered in the design of the Evaluation Boards and Reference Boards provided by Infineon Technologies. The design of the Evaluation Boards and Reference Boards has been tested by Infineon Technologies only as described in this document. The design is not qualified in terms of safety requirements, manufacturing and operation over the entire operating temperature range or lifetime.

The Evaluation Boards and Reference Boards provided by Infineon Technologies are subject to functional testing only under typical load conditions. Evaluation Boards and Reference Boards are not subject to the same procedures as regular products regarding returned material analysis (RMA), process change notification (PCN) and product discontinuation (PD).

Evaluation Boards and Reference Boards are not commercialized products, and are solely intended for evaluation and testing purposes. In particular, they shall not be used for reliability testing or production. The Evaluation Boards and Reference Boards may therefore not comply with CE or similar standards (including but not limited to the EMC Directive 2004/EC/108 and the EMC Act) and may not fulfill other requirements of the country in which they are operated by the customer. The customer shall ensure that all Evaluation Boards and Reference Boards will be handled in a way which is compliant with the relevant requirements and standards of the country in which they are operated.

The Evaluation Boards and Reference Boards as well as the information provided in this document are addressed only to qualified and skilled technical staff, for laboratory usage, and shall be used and managed according to the terms and conditions set forth in this document and in other related documentation supplied with the respective Evaluation Board or Reference Board.

It is the responsibility of the customer's technical departments to evaluate the suitability of the Evaluation Boards and Reference Boards for the intended application, and to evaluate the completeness and correctness of the information provided in this document with respect to such application.

The customer accepts that the Evaluation Boards and Reference Boards are not intended to be used in life-endangering applications such as medical, nuclear, military, life-critical or other applications, where failure of the Evaluation Boards and Reference Boards, or any results from the use thereof, can reasonably be expected to result in personal injury.

The Evaluation Boards and Reference Boards and any information in this document is provided "as is" and Infineon Technologies disclaims any warranties, express or implied, including but not limited to warranties of non-infringement of third party rights and implied warranties of fitness for any purpose, or for merchantability.

Infineon Technologies shall not be responsible for any damages resulting from the use of the Evaluation Boards and Reference Boards and/or from any information provided in this document. The customer is obliged to defend, indemnify and hold Infineon Technologies harmless from and against any claims or damages arising out of or resulting from any use thereof.

Infineon Technologies reserves the right to modify this document and/or any information provided herein at any time without further notice.

1 Safety precautions

In addition to the precautions listed throughout this manual, please read and understand the following statements regarding hazards associated with development systems.

Table 1 Precautions

	***Attention: The ground potential of the EVAL-M3-IM564 system is biased to a negative DC bus voltage potential. When measuring voltage waveform by oscilloscope, the scope's ground needs to be isolated. Failure to do so may result in personal injury or death and equipment damage.***
	***Attention: Only personnel familiar with the drive and associated machinery should plan or implement the installation, start-up and subsequent maintenance of the system. Failure to comply may result in personal injury and/or equipment damage.***
	***Attention: The surfaces of the drive may become hot, which may cause injury.***
	***Attention: EVAL-M3-IM564 system contains parts and assemblies sensitive to Electrostatic Discharge (ESD). Electrostatic control precautions are required when installing, testing, servicing or repairing this assembly. Component damage may result if ESD control procedures are not followed. If you are not familiar with electrostatic control procedures, refer to applicable ESD protection handbooks and guidelines.***
	***Attention: A drive, incorrectly applied or installed, can result in component damage or reduction in product lifetime. Wiring or application errors such as under sizing the motor, supplying an incorrect or inadequate DC supply or excessive ambient temperatures may result in system malfunction.***
	***Attention: Remove or connect the control board from or to the power drive. Wait three minutes after removing power from the power drive to discharge the bus capacitors. Do not attempt to service the drive until the bus capacitors have discharged to zero. Failure to do so may result in personal injury or death.***
	***Attention: EVAL-M3-IM564 system is shipped with packing materials that need to be removed prior to installation. Failure to remove all packing materials which are unnecessary for system installation may result in overheating or abnormal operating condition.***

2 Introduction

The EVAL-M3-IM564 Evaluation power board is a part of the iMOTION™ Modular Application Design Kit for motor drives (iMOTION™ MADK). In order to run a motor, the matching control board is required to interface this power board.

The MADK platform is intended to use various power stages with different control boards. These boards can easily be interfaced through the 30-pin iMOTION™ MADK M3 such as EVAL-M3-102T, or the 20-pin iMOTION™ MADK M1 interface connector to control board. This board is equipped with 30-pin M3 connector and is intended for single motor control only.

This Evaluation board is designed to give Easy-to-use power stage based on the Infineon's CIPOS™ Mini Inteligent Power Module (IPM). The board is equipped with all assembly groups for sensorless field oriented control (FOC). It provides a single-phase AC-connector, rectifier, Boost PFC and 3-phase output for connecting the motor. The power stage also contains emitter shunts for current sensing and a voltage divider for DC-link voltage measurement.

The EVAL-M3-IM564 Evaluation board is available through regular Infineon distribution partners as well as on Infineon's website. The features of this board are described in the main features chapter of this document, whereas the remaining paragraphs provide information to enable the customers to copy, modify and qualify the design for production according to their own specific requirements.

Environmental conditions were considered in the design of the EVAL-M3-IM564, but it is not qualified regarding safety requirements or manufacturing and operation over the whole operating temperature range or lifetime. The boards provided by Infineon are subject to functional testing only.

The block diagram of the EVAL-M3-IM564 is depicted in Figure 1. This Evaluation board includes an EMI filter and soft power up circuit, 30 pins iMOTION™ MADK-M3 interface connector, auxiliary power supply to provide 15V and 3.3V, PFC gate dirve circuit and the CIPOS™ Mini IPM IM564-X6D/IM564-X6DS.

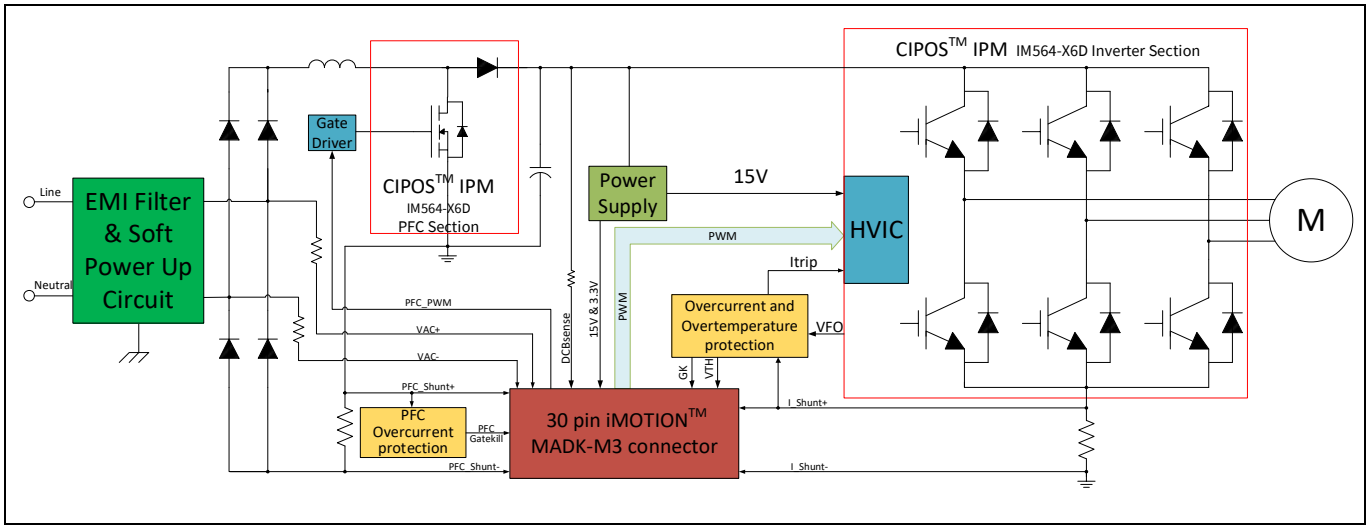

Figure 1 The Block Diagram of the EVAL-M3-IM564

The hardware circuit regarding overtemperature and overcurrent protection is also included in this power board. The sense connection to common emitter shunt resistor is connected to the 30 pins iMOTION™ MADK-M3 interface connector. This power board is compatible with PFC integrated CIPOS™ Mini IPMs that feature 3 phase common emitter and built-in NTC considering motor power rating and IPM's current rating.

Evaluation boards are not subject to the same procedures as regular products regarding Returned Material Analysis (RMA), Process Change Notification (PCN) and Product Discontinuation (PD). Evaluation boards are intended to be used under laboratory conditions by technical specialists only.

3 EVAL-M3-IM564 main features

EVAL-M3-IM564 is an Evaluation board for motor drive applications with single phase PFC integrated 3 phase IPM. Combined in a kit with one of the available MADK control board options, it demonstrates Infineon's motion control IC and IPM technology for motor drives with single phase PFC.

Main features of CIPOS™ Mini IPM IM564-X6D/IM564-X6DS are:

- 3 half bridges with TRENCHSTOP™ 20 A/600 V and antiparallel diodes for inverter section
- 20 A/600 V CoolMOS™ Power MOSFET and rapid switching emitter controlled diode for PFC section
- Lead-free terminal plating; RoHS compliant
- Very low thermal resistance due to DCB
- Rugged SOI gate driver technology with stability against transient and negative voltage
- Negative potential allowed up to VS =-11 V for single transmission at VBS=15 V
- Integrated bootstrap functionality
- Overcurrent shutdown
- Temperature monitor
- Undervoltage lockout at all channels
- Low side common emitter
- Cross conduction prevention
- All six switches turn off during protection

The Evaluation board characteristics are:

- Input voltage 165~265 VAC
- Maximum 2800 W motor power output
- Power Factor Correction
- On board EMI filter
- Current sensing with single shunt
- Auxiliary power supply with 15 V, 3.3 V
- Overcurrent protection
- Overtemperature hardware protection
- Sensing of DC-link voltage
- Thermistor output
- Fault diagnostic output
- Measurement test-points compatible to standard oscilloscope probes
- PCB is 148 mm × 165 mm and has two layers with 35µm copper each
- RoHS compliant

3.1 EVAL-M3- IM564 board specifications

Table 2 depicts the important specifications of the Evaluation board EVAL-M3-IM564.

Table 2 EVAL-M3-IM564 board specifications

Parameters	Values	Conditions / comments
Input		
Voltage	165 - 265 V_{rms}	lower AC input, less motor power output
Current	13.3 A_{rms}	input 165 V_{AC}(enable PFC function), Pin=2200 W, f_{PWM}=6 kHz, f_{PFC}=50 kHz, T_a=25 °C, T_h=80 °C, Motor speed=2500 RPM
	10 A_{rms}	input 220 V_{AC}(enable PFC function), Pin=2200 W, f_{PWM}=6 kHz, f_{PFC}=50 kHz, T_a=25 °C, T_h=80 °C, Motor speed=2500 RPM
	12.7 A_{rms}	input 220 V_{AC}(enable PFC function), Pin=2800 W, f_{PWM}=6 kHz, f_{PFC}=50 kHz, T_a=25 °C, T_h=80 °C, Motor speed=2500 RPM
Output		
Power(3phases)	2000 W	165 V_{AC} ≤ input ≤ 265 V_{AC}(enable PFC function), f_{PWM}=6 kHz, f_{PFC}=50 kHz, T_a=25 °C, T_h=80 °C, Motor speed=2500 RPM
	2800 W	220 V_{AC} ≤ input ≤ 265 V_{AC}(enable PFC function), f_{PWM}=6 kHz, f_{PFC}=50 kHz, T_a=25 °C, T_h=80 °C, Motor speed=2500 RPM
Current per leg	6.6 A_{rms}	input =220 V_{AC}(enable PFC function), p_{out}=2000 W, f_{PWM}=6 kHz, f_{PFC}=50 kHz, T_a=25 °C, T_h=80 °C, Motor speed=2500 RPM
	8.7 A_{rms}	input =220 V_{AC}(enable PFC function), p_{out}=2800 W, f_{PWM}=6 kHz, f_{PFC}=50 kHz, T_a=25 °C, T_h=80 °C, Motor speed=2500 RPM
DC Bus Voltage		
Recommend DC bus voltage	380 V	Enable PFC and for Higher input voltage
Recommend DC bus voltage	340 V	Enable PFC and for Lower input voltage
Switching Frequency		
PFC switching frequency f_{PFC}	50 kHz (typ.)	For EVAL-M3-IM564 evaluation borad
	50 kHz (max)	Limited by controller board EVAL-M3-102T
Inverter switching frequency f_{PWM}	6 kHz (typ.)	For EVAL-M3-IM564 evaluation borad
	20 kHz (max)	Limited by controller board EVAL-M3-102T
Current feedback		
PFC current sensing resistor	10 mΩ	RS3
Inverter current sensing resistor	10 mΩ	RS4
Protections		
PFC OCP1	20 A_{peak}	Set EVAL-M3-102T's PFCITRIPREF=2.57 V,that are R8=470 ohm,R9=1.65 kohm

Parameters	Values	Conditions / comments
PFC OCP2	22 A_{peak}	Configured by either PFC current sensing resistor RS3, or adapting comparator threshold divider resistor R5/R7 or R4/R8
Inverter OCP1	[1]20 A_{peak}	Configured by MCEWizard only, OPA output Max range peak value is 31A_{peak}(23.8A_{rms})
Inverter OCP2	22 A_{peak}	Configured by changing shunt resistor RS4 , or adapting comparator threshold divider resistor R30/R31 or R19/R29
Inverter OCP3	25 A_{peak}	Configured by changing shunt resistor RS4 , or threshold diliver resistor R40/R41, ITRIP positive going threshold is about 525 mV
Temperature trip level	100 °C	For controller board EVAL-M3-102T
On board power supply		
15 V	15 V ± 5 %, max. 1A	Used for CIPOS™ IPM gate driver & cooling fan
3.3 V	3.3 V ± 2 %, max. 20 mA	Supplying the 3.3V to the controller board and protection circuits
PCB characteristics		
Material	FR4, 1.6mm thickness, 2 layers. 35 µm copper thickness	
Dimension	148 mm × 165 mm	
System environment		
Ambient temperature	25°C	NA

[1] For iMOTION™ IC IMC1xx, there are three types of Gatekill Input Source (Refer to section 5.2.3 or control board user manual for detail). Please note that, if select comparator for Gatekill Input Source, the external Gatekill signal will be not used. And the signal I_Shunt will be compared by the internal comparator with the “Gatekill Comparator Reference” value set in MCEWizard only.

Figure 2 points out the functional groups on the top side of the EVAL-M3-IM564 Evaluation board.

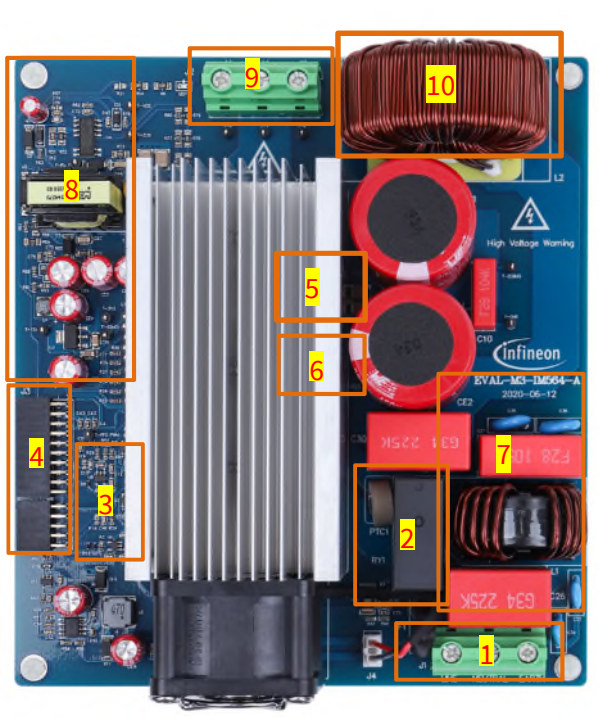

1. J1 - AC Input connector
2. Relay, NTC and Fuse
3. PFC gate drive and PFC overcurrent protection circuits
4. J3 - 30 pin iMOTION™ MADK-M3 interface connector for controller board
5. Current sensing shunt resistor RS3.
6. PFC Current sensing resistor RS4.
7. EMI filter
8. Auxiliary power supply
9. J2 - Motor phase connector
10. PFC inductor

Figure 2 Functional groups of the EVAL-M3-IM564 Evaluation board's top side

Figure 3 points out the functional groups on the bottom side of the EVAL-M3-IM564 Evaluation board.

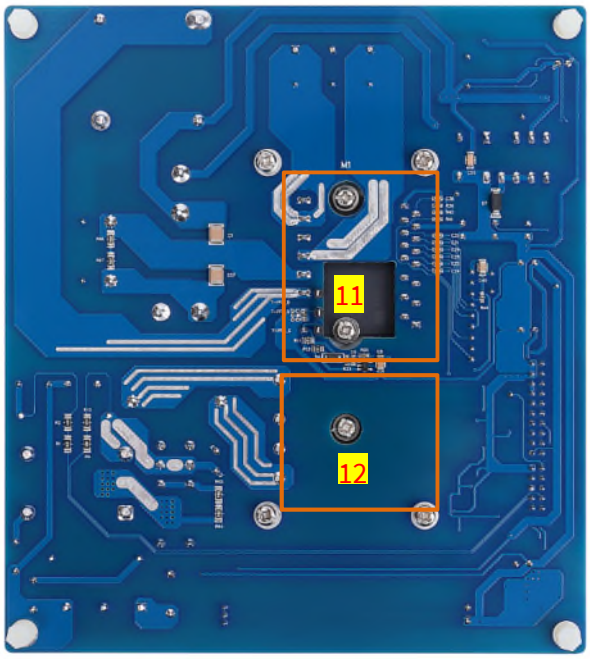

11. CIPOS™ mini IPM U4
12. Rectifier bridge D1

Figure 3 Functional groups of the EVAL-M3-IM564 Evaluation board's bottom side

3.2 Pin assignment

General information about the connectors of the EVAL-M3-IM564 Evaluation board is reported. Table 3 includes the details of the AC input connector J1.

Table 3 J1- AC Line connector

S. No.	Pin	Details
1	**L**ine	AC line input
2	**N**eutral	AC neutral input
3	**E**arth	Earth ground

Table 4 provides the details of the motor side connector J2.

Table 4 J2- Motor side connector

S. No.	Pin	Details
1	W	Connected to motor phase W
2	V	Connected to motor phase V
3	U	Connected to motor phase U

Table 5 provides the pin assignments of the 30 pins iMOTION™ MADK-M3 interface connector J3. This connector is the interface to the controller board.

Table 5 J3 - iMOTION™ MADK-M3 30 pin interface connector for controller board

Pin	Name	Pin Name Connectors
1	PWMUH	3.3 V compatible logic input for high side gate driver-Phase U
2	GND	Ground
3	PWMUL	3.3 V compatible logic input for low side gate driver-Phase U
4	GND	4 GND Ground
5	PWMVH	3.3 V compatible logic input for high side gate driver-Phase V
6	+3.3V	On board 3.3 V supply
7	PWMVL	3.3 V compatible logic input for low side gate driver-Phase V
8	+3.3V	On board 3.3 V supply
9	PWMWH	3.3 V compatible logic input for high side gate driver-Phase W
10	I_U	Positive Current sense output
11	PWMWL	3.3 V compatible logic input for low side gate driver-Phase W
12	I_U-	Negative current sense output or Ground
13	GK	Gate kill signal – active low when overcurrent is detected
14	DCBSense	DC bus positive voltage, scaled in 0-3.3 V range by a voltage divider
15	VTH	Thermistor Output
16	I_V	Not used
17	I_V-	Not used
18	I_W	Not used
19	I_W-	Not used

Pin	Name	Pin Name Connectors
20	VCC	15 V Power Supply
21	PFCG0	3.3 V compatible logic input for PFC gate driver IC
22	GND	Ground
23	PFCG1	Not used
24	+3.3V	On board 3.3 V supply
25	PFCGK	PFC Gate kill signal – active low when PFC overcurrent is detected
26	DCBSense	DC bus positive voltage, scaled in 0-3.3 V range by a voltage divider
27	VAC+	AC voltage sensing positive cycle
28	VAC-	AC voltage sensing negative cycle
29	IPFC+	PFC current sensing positive
30	IPFC-	PFC current sensing negative

4 Getting Started with EVAL-M3-IM564

In order to run the motor system, a combination of the iMOTION™ MADK power board (EVAL-M3-IM564) and the matching MADK control board is required. The iMOTION™ Software Tools MCEDesigner and MCEWizard are also required in order to initialy setup the system, as well as to control and fine-tune the system performance to match users exact needs. This chapter provides more details on setting up the system and getting started with iMOTION™ MADK development platform.

Note: If you are using an EVAL-M3-102T control board, please make the following changes to better match EVAL-M3-IM564 for OPA's Gain and PFC OCP level.

1. *Delete R6 and R10 of EVAL-M3-102T*
2. *R13 of EVAL-M3-102T from 2 kohm change to 0 ohm*
3. *R25 of EVAL-M3-102T from 1 kohm change to 0 ohm*
4. *R8 of EVAL-M3-102T from 24 kohm change to 470 ohm*
   R9 of EVAL-M3-102T from 470 ohm change to 1.65 kohm for PFCTRIPREF

4.1 Setting up the system

After downloading and installing the iMOTION™ PC Tools (MCEWizard and MCEDesigner), following steps needs to be executed in order to run the motor. Refer to user manul for iMOTION™ MADK control board such as (EVAL-M3-102T), MCEWizard and MCEDesigner documentation for more information.

Figure 4 shows the system connection using EVAL-M3-IM564 and control board (used control board EVAL-M3-102T for example).

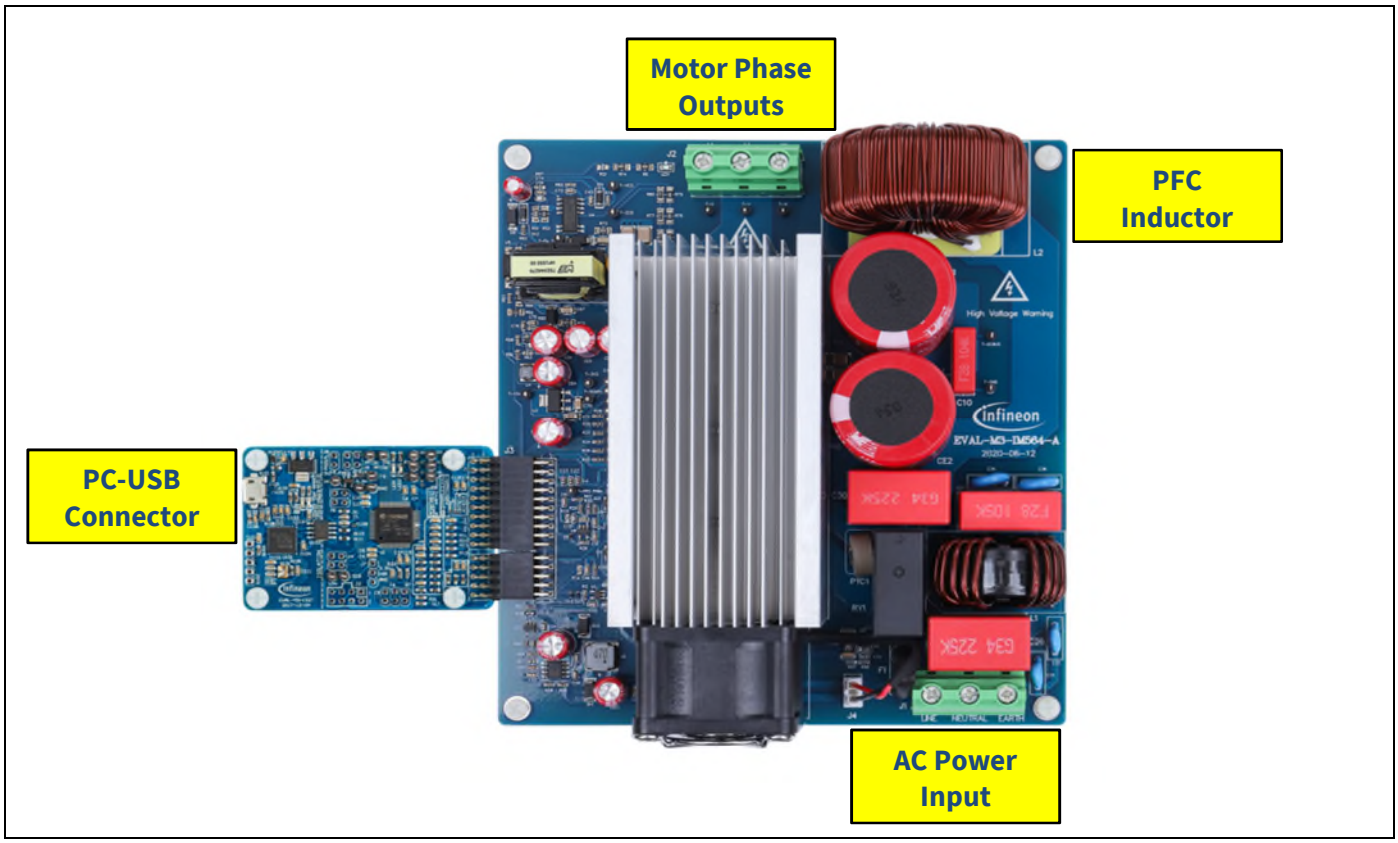

Figure 4 System connection example using EVAL-M3-IM564

1. Connect PC-USB connector on the on-board-debugger to the PC via USB cable.
2. Connect EVAL-M3-IM564's MADK M3 30-pin interface connector (J3) to control board (see Figure 4).
3. Get the latest "IMC102T-F064 MCE Software Package" available on www.infineon.com/imotion-software web page. (Infineon iMOTION™ control IC IMC102T-F064 is used for control board EVAL-M3-102T).
4. Connect motor phase outputs to the motor.
5. Use MCEWizard to enter the motor and Evaluation board hardware parameters and click button "Export to Designer file (.txt)" to system drive parameters file which will be used by MCEDesigner.
6. Connect AC power to power input connector (J1) and power on system.
7. Open MCEDesigner and open MCEDesigner default configuration file (.irc) for IMC102T devices (IMC102T_xx.irc) by clicking "File" menu and select "Open" in the pull down list.
8. Import system drive parameters file (generated in step 5) into MCEDesigner by clicking "File" > "Import Drive Parameters". Select "Update All" radio button.
9. Program the MCE Firmware and system parameters into the internal Flash memory of iMOTION™ IC by clicking "Tools > Programmer "in the pull down menu, and then clicking on the "Program Firmware and Parameter" radio button. See chapter MCEDesigner setup overview setion 0 for more details. If the latest version of MCE firmware is already programmed into the IMC102T-F064 IC, then programming firmware can be skipped by selecting "Program Parameters" radio button option. Finally click "Start" button to program firware and parameter (or parameters only when programming firmware was skipped).
10. Start the motor by clicking the green traffic light button in the control bar.

4.2 iMOTION™ development tools and software

The iMOTION™ Development Tool installers for MCEDesigner and MCEWizard are available for download via Infineon iMOTION™ website (http://www.infineon.com/imotion-software). All the available tools and software variants are listed there.

On-board debugger uses the SEGGER J-Link's driver for UART communication with IMC102T-F064. J-Link driver will be installed during the MCEDesigner installation. In case the driver is not installed properly, please go to SEGGER J-Link website to download and install the latest J-Link "Software and Documentation pack for Windows".

4.2.1 MCEWizard setup overview

After installing the MCEWizard, the shortcut for MCEWizard appears on the Windows desktop. Double click the shortcut to open the MCEWizard and configure the parameters for Evaluation boards and motor. Figure 6 5 shows the "Welcome Page" for MCEWizard, where the MADK control board or power board can be selected through the pull-down list. Infineon keep releasing new MADK controller and power boards. Therefore, it could happen that some of the newest power boards are not pre-configured in the MCEWizard tool and cannot be selected through the pull-down menu. In that case, the user should select any other power board (as similar as possible) and follow the MCEWizard setup steps by entering the parameter values which are specific to the chosen board. Make sure both "I have modified the circuit board" and "Enable advanced question" checkmarks are selected (or check "Customized Design for Expert User"). Please refer to the User Manual of the corresponding power board for additional information.

After selecting the MADK control and the power board, start the MCEWizard system setup procedure by clicking the "Next" button in the right bottom corner as shown in Figure 5.

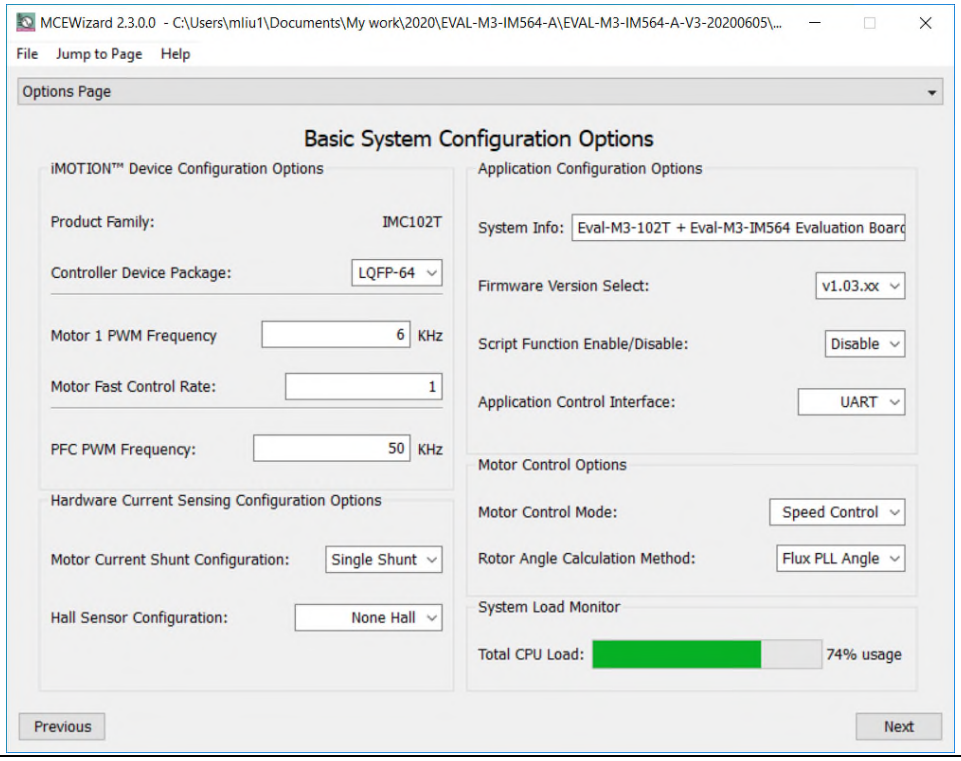

Figure 5 Welcome Page of MCEWizard

iMOTION™ MADK system enables users to easily test different combination of control and power boards with their motors. User should be familiar with the system level parameters which are related to the motor used.

There are very limited numbers of parameters which are specific to the control board or power board hardware. Table 6 provides the MCEWizard setup overview for hardware related parameters. Similar tables will be available in each control board's User Manual. Combination of this table and the corresponding table of the control board provides enough information to setup the MADK-based motor drive system in shortest time.

Table 6 MCEWizard setup overview table

Page	Parameter	Value	Comment
Welcome Page	Control Board selecting	MADK control board name	Or Select similar board (IMC101/102/IMM/IMD)
Options Page	Motor 1 Shunt Configuration	Single Shunt	
Question 2	Motor Rated Amps	9 Arms	GK6081-6AC31-FE
Question 3	Motor Poles	6	GK6081-6AC31-FE
Question 4	Motor Stator Resistance	0.3 ohms/phase	GK6081-6AC31-FE
Question 5	Motor Lq Inductance	2 mH	GK6081-6AC31-FE
Question 6	Motor Ld Inductance	2 mH	GK6081-6AC31-FE
Question 7	Motor Back EMF Constant(Ke)	32 V(ln-rms)/krpm	GK6081-6AC31-FE
Question 8	Motor Max RPM	3276 RPM	GK6081-6AC31-FE
Question 16	Target DC BUS Voltage Initialization	360 V	For EVAL-M3-102T and EVAL-M3-IM564 only
Question 24	Controller Supply Voltage	3.3 V	For EVAL-M3-102T and EVAL-M3-IM564 only
Question 46	Max DC Bus Voltage	500V	
Question 50	DC Bus Sensing High Resistor	2000KΩ	Power board's parts
Question 51	DC Bus Sensing Low Resistor	Refer to control board user manual (13.3kΩ for EVAL-M3-102T default)	Control board's part
Question 72	NTC Over-Temperature Voltage Threshold	Calculated as the Section 5.3.3	Refer to the control board user manual
Question 78	Inverter Dead Time	~2us	Depends on IPM
Question 80	GateSense Low-Side Devices	High is true	
Question 81	GateSense High-Side Devices	High is true	
Question 83	Current Feedback and Sample Timing	100 mV/A	For EVAL-M3-IM564 only
Question 84	Internal ADC Gain	1	Depends on AD range
Question 93	Overcurrent Trip Level for Internal GateKill Comparator	20 A	For EVAL-M3-IM564 only
Question 107	PFC Topology	Boost PFC	
Question 104	PFC Inductance	0.519mH	For EVAL-M3-IM564 only
Question 110	PFC Current Measurement Input Scaling	Calculated as the Section 5.1.3	
Question 114	AC Voltage Sensing High Resistor	2000kΩ	Power board's parts

Page	Parameter	Value	Comment
Question 115	AC Voltage Sensing low Resistor	Refer to control board user manual	15kΩ by default for EVAL-M3-102T
Question 117	PFC Gate Driver Polarity Low Side	High is active	
Question 118	PFC Current Sample Delay Time	0~0.67us	Denpends on SNR & switching noise

After all the MCEWizard questions are answered, the “Verify & Save Page” will be shown as in Figure 6

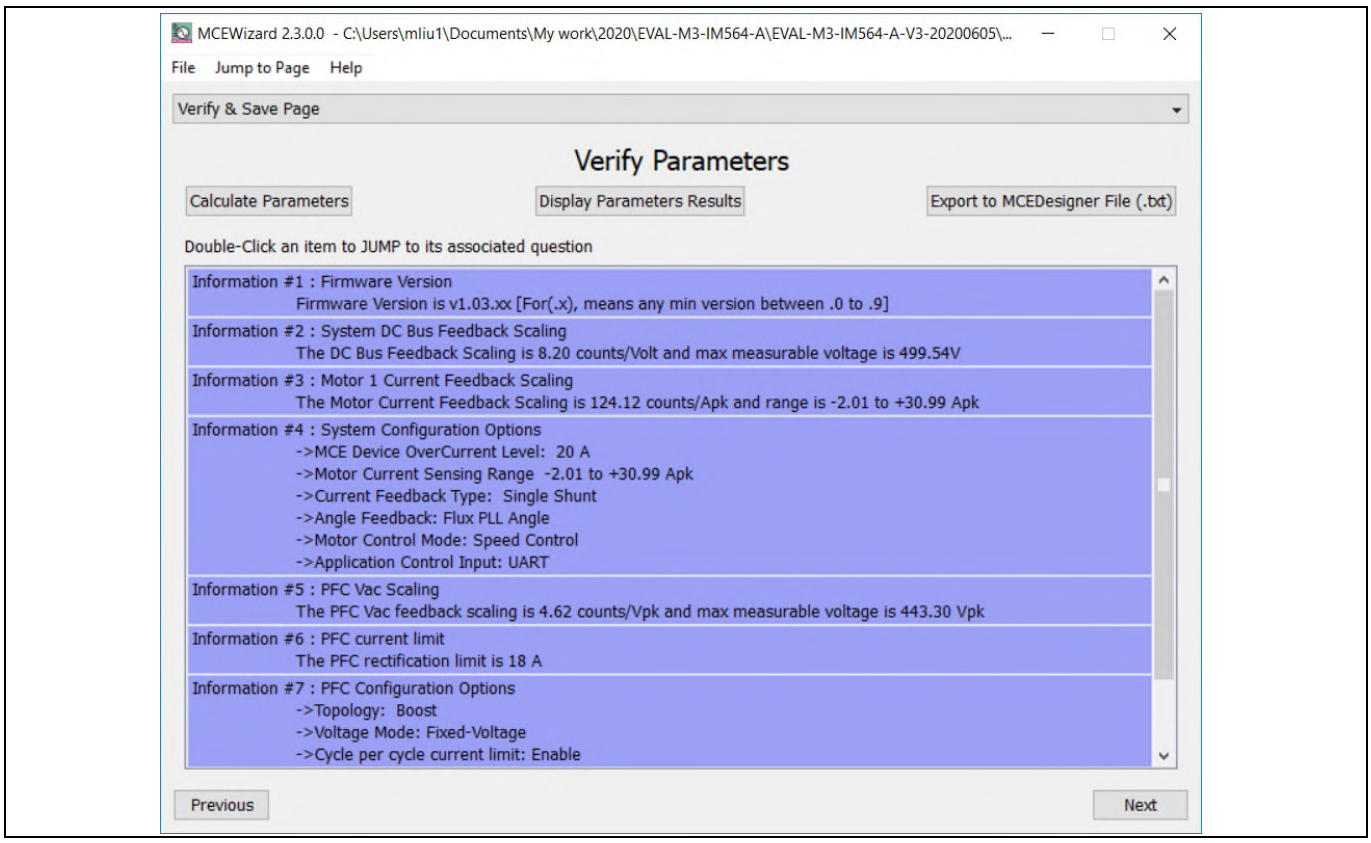

Figure 6 Verify and Save page for MCEWizard

Click “Calculate” button and “Export to Designer File (.txt)” button to save the parameter file which will be used by the MCEDesigner in the next steps.

4.2.2 MCEDesigner setup overview

After installing MCEDesigner installer, there is a shortcut for MCEDesigner on Windows desktop. Double click the shortcut to open MCEDesigner and then open “IMC102T_xx.irc” file, and resize the windows for better display, as shown in Figure 7.

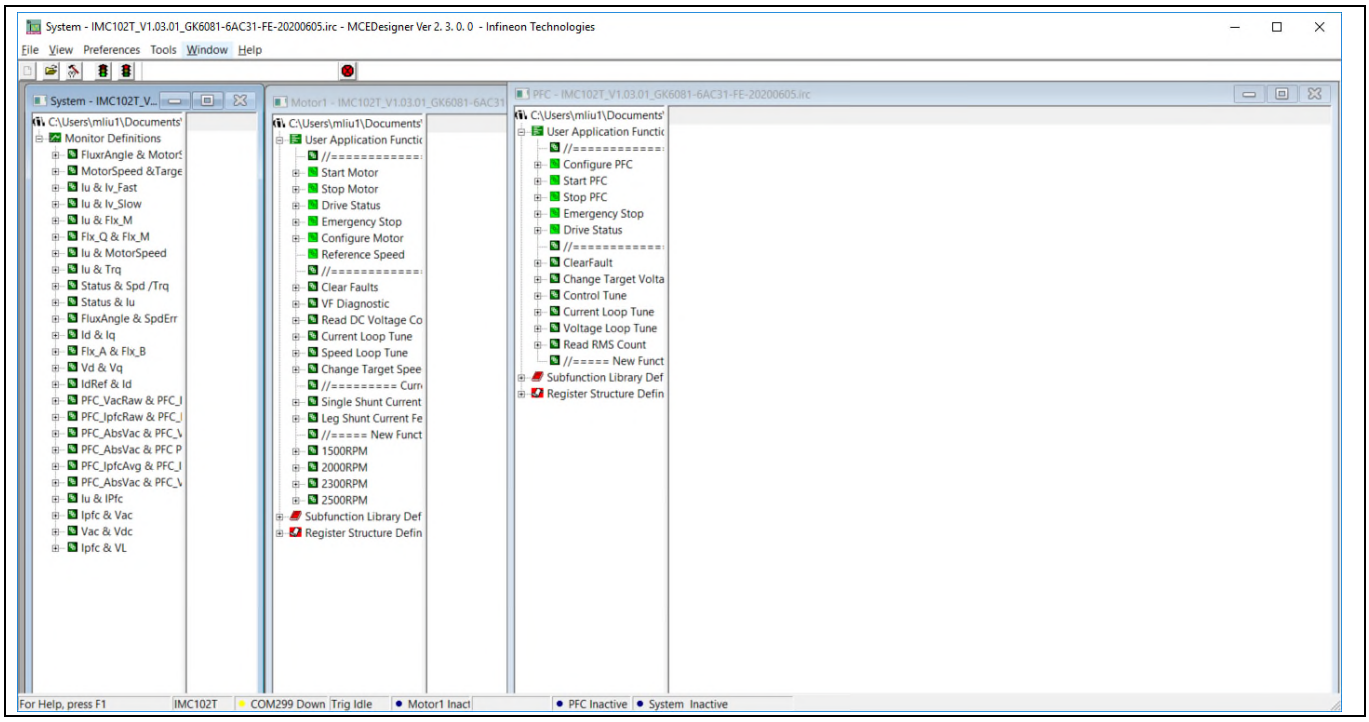

Figure 7 MCEDesigner’s Main Display for IMC102T

To program system drive parameters into IMC102T-F064, please click “Tools” menu and select “Programmer” in the pull down list. The pop-up window “Program IMC controller” will show up as in Figure 8. Click on the “Program Parameters” radio button (this is the default option), and then select the Drive System Parameter file created using MCEWizard by clicking on “Browse”. Finally, click on the “Start” button to program the parameter file into the IMC102T-F064 IC.

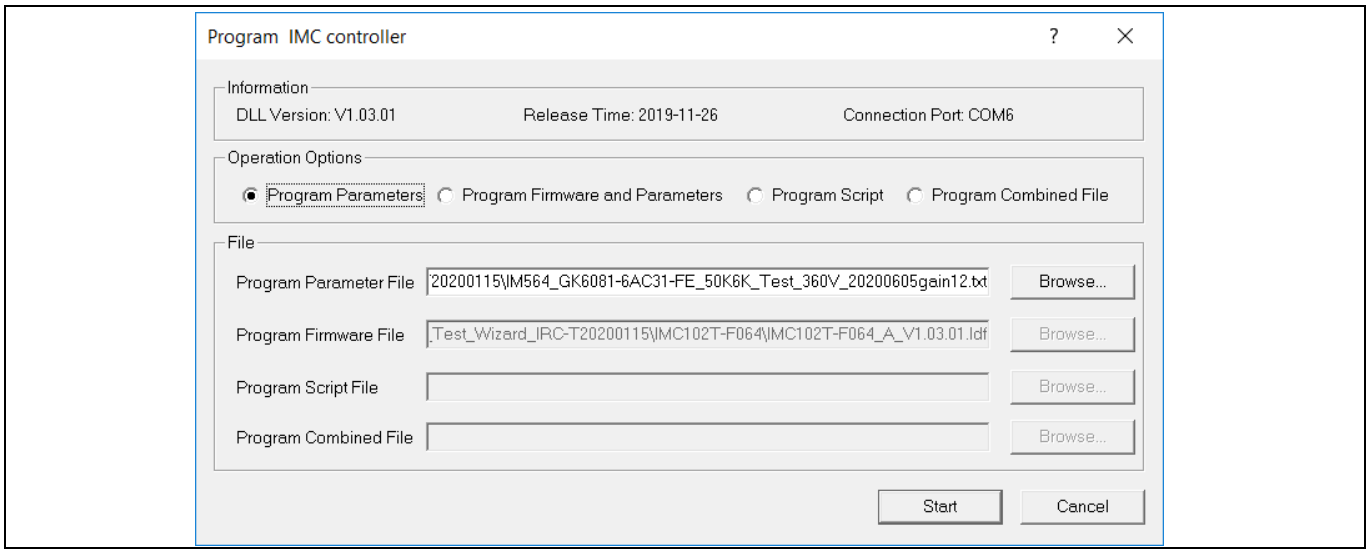

Figure 8 “Program IMC Controller” pop-up window

After Drive System Parameter file has been programmed into IMC102 controller, and the motor drive system is powered, the MCEDesigner can be used to start/stop the motor, display motor current traces, change the motor speeds, modify drive parameters and many other functions. Please refer to the MCEDesigner documentation for more details.

Note: *On-board Debugger portion of EVAL-M3-102T is galvanically isolated from the controller portion and the attached power board. In order to program the parameters or firmware to the IMC102T-F064 controller, the 3.3V DC voltage needs to be supplied to the controller portion of the EVAL-M3-102T. This voltage can either be supplied by the power board (MADK power boards are designed to supply the 3.3V to the control board through M3 connector) or by feeding the 3.3V DC voltage to the control board through some of the available 3.3V access/test points if the power board is not attached to the EVAL-M3-102T control board.*

To program new firmware and Drive System Parameter into IMC102T-F064, please click “Tools” menu and select “Programmer” in the pull down list. The pop-up window “Program IMC controller” will show up as in Figure 9. Click on the “Program Firmware and Parameter” radio button, and select the Drive System Parameter file created using MCEWizard by clicking on the “Browse” button on the row of “Program Parameter File”, and then select the firmware file by clicking on the “Browse” button on the row of “Program Firmware File”. Finally, click on the “Start” button to program the parameter file into the IMC102T-F064 IC.

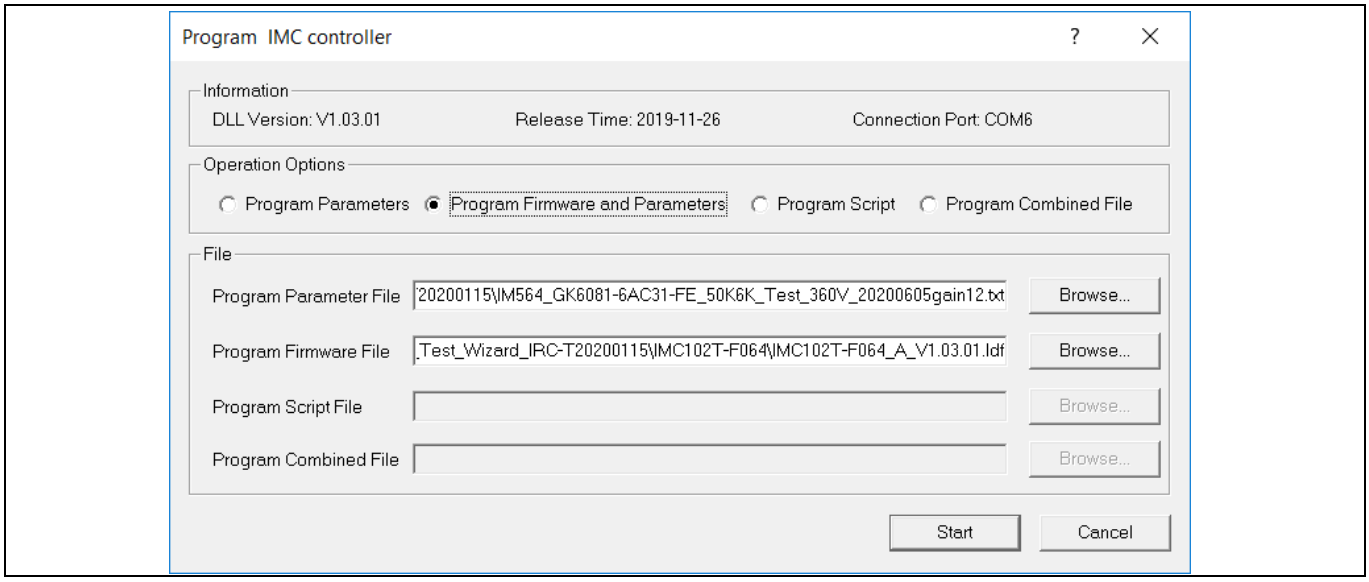

Figure 9 Program Firmware and Parameter in “Program IMC Controller” pop-up window

All latest firmware file for different type of iMOTION™ control ICs are available for download via Infineon iMOTION™ website (http://www.infineon.com/imotion-software).

5 Hardware description of EVAL-M3-IM564

To meet individual customer requirements and make the EVAL-M3-IM564 Evaluation board a basis for development or modification, all necessary technical data like schematics, layout and components are included in this chapter.

5.1 Boost PFC section using CIPOS™ mini IPM

Figure 10 depicts the schematic from the AC input connector J1 to the rectified DC bus voltage DCBUS. This circuitry includes a passive EMI filter consisting of elements X2, Y2 capacitors and common mode inductor, a 25 A/1200 V rectifier bridge D1, a fuse F1 for circuit protection, a PTC resistor PTC1 and a relay RY1 for soft powering up and reducing conduction losses in steady state. The PFC section is implemented using the CIPOS™ mini IPM as sketched in Figure 10. The IRS44273L is used to drive MOSFET for PFC section.

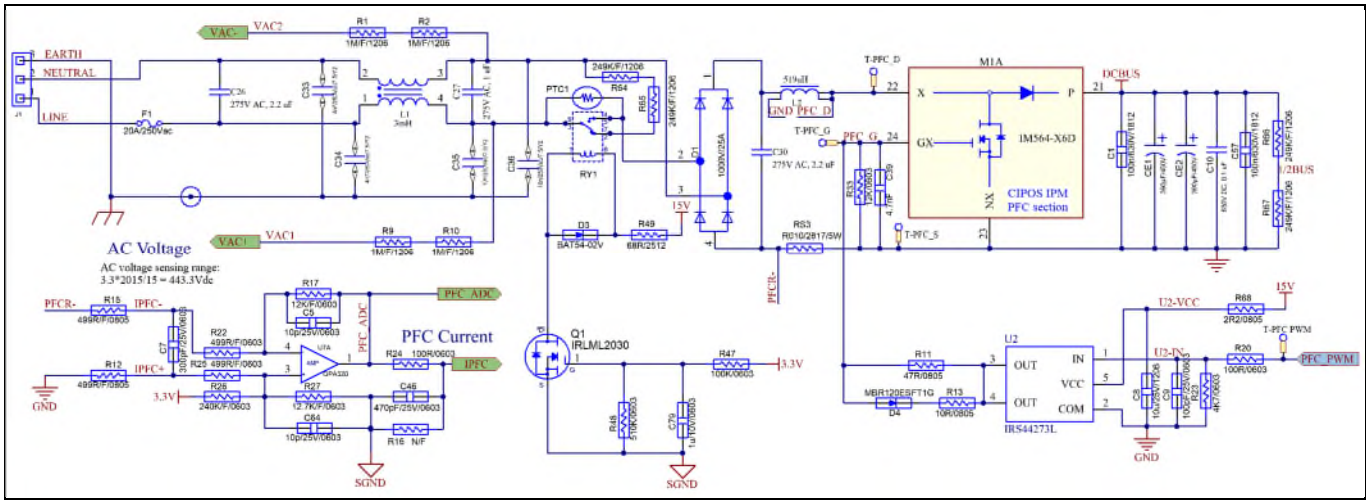

Figure 10 Schematic for EMI filter and PFC section of the EVAL-M3-IM564 Evaluation board

The PFC section of CIPOS™ IPM IM564-X6D/IM564-X6DS contains a CoolMOS™ power MOSFET and a rapid switching emitter controlled diode. Two electrolytic capacitors CE1 and CE2 are used for buffering the rectified DC bus voltage DCBUS.

5.1.1 AC Voltage sensing and MCEWizard configuration

AC voltage sensing is in the front of rectifier bridge D1 by default as shown in Figure 10. To dive the boost PFC circuitry for EVAL-M3-IM564, the default matching MADK control board is EVAL-M3-102T. Figure 11 shows the VAC sensing schematic of EVAL-M3-102T Evaluation board.

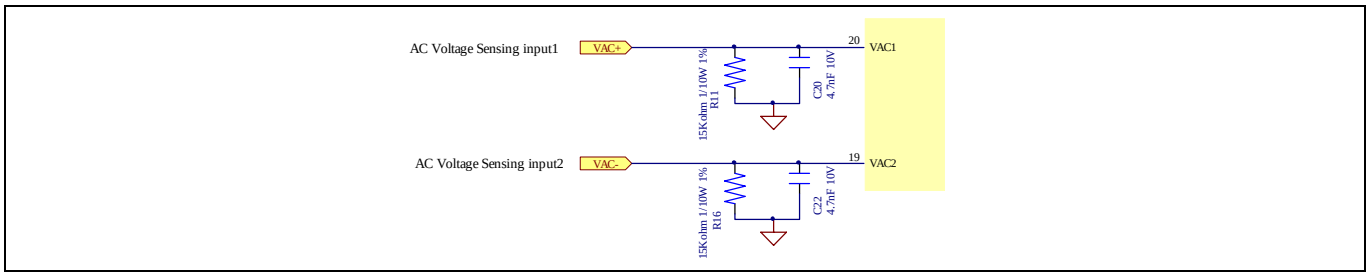

Figure 11 The AC Voltage sensing schematic of EVAL-M3-102T

The configuration of PFC topology in MCEWizard is shown in Figure 12.

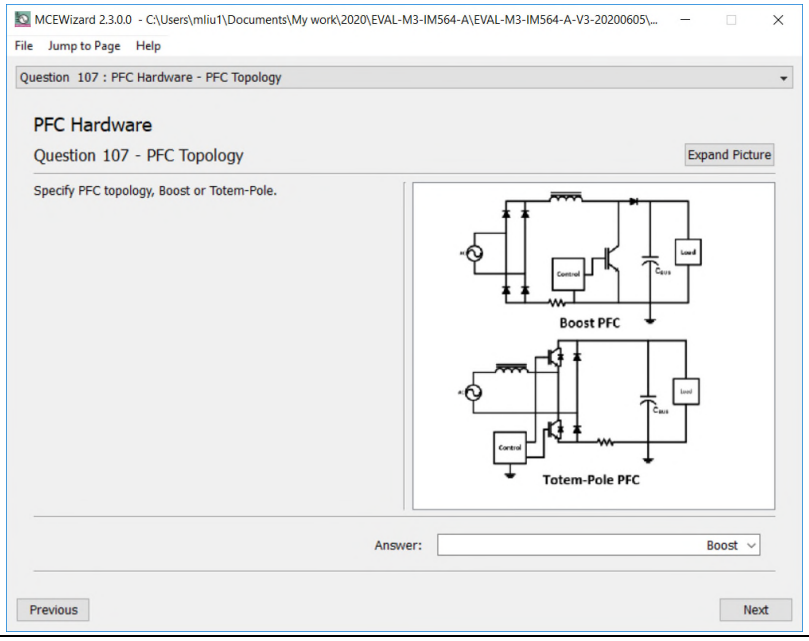

Figure 12 Vac Sensing Method configuration for EVAL-M3-102T and EVAL-M3-IM564

The high side resistors R1 and R2 or R9 and R10 for the AC voltage sensing resistor divider on the power board EVAL-M3-IM564 is 2000kΩ, and should be configured in MCEWizard as shown in Figure 13. For the low side resistor value, please refer to the User Manual of the corresponding control board.

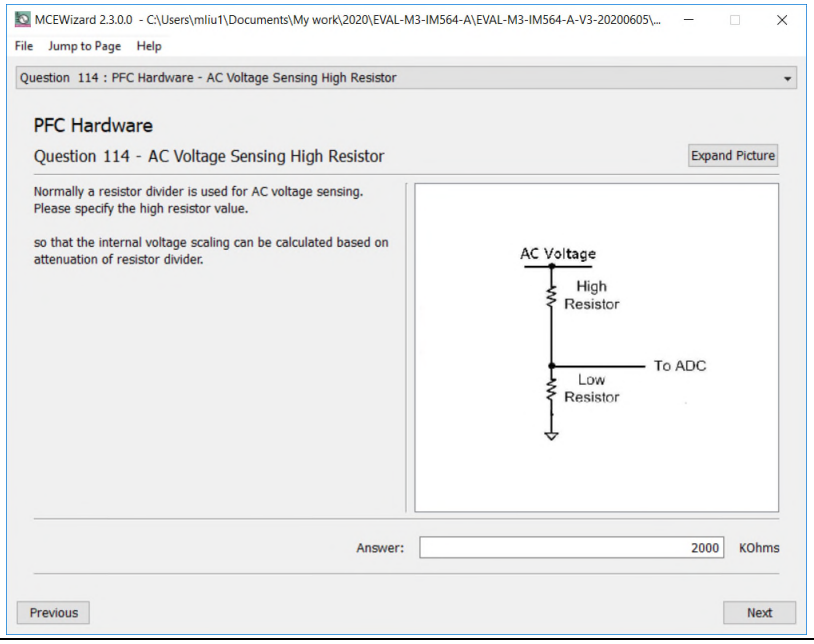

Figure 13 AC Voltage sensing configuration in MCEWizard

5.1.2 Hardware Modification for AC Voltage sensing to work with IRMCF188

As mentioned in the previous setion, AC voltage sensing is in the front of rectifier bridge D1 by default for this power board EVAL-M3-IM564 as shown in Figure 10. But for control board EVAL-M3-188 with controller IC IRMCF188, AC Voltage sensing should be behind the rectifier bridge D1. To work with control board EVAL-M3-

188 or IRMCF188, power board EVAL-M3-IM564 should be modified by assembling 1MΩ AC Voltage sensing resistors R2A and R10A and removing the resistors R2 and R10.

5.1.3 PFC External Current feedback configuration and calculation

The PFC shunt resistor RS3 is 5mΩ for EVAL-M3-IM564. But for control board EVAL-M3-102T, the current input value is product of the shunt resistance in milliohms and gain of External current sense amplifier as shown in Figure 14.

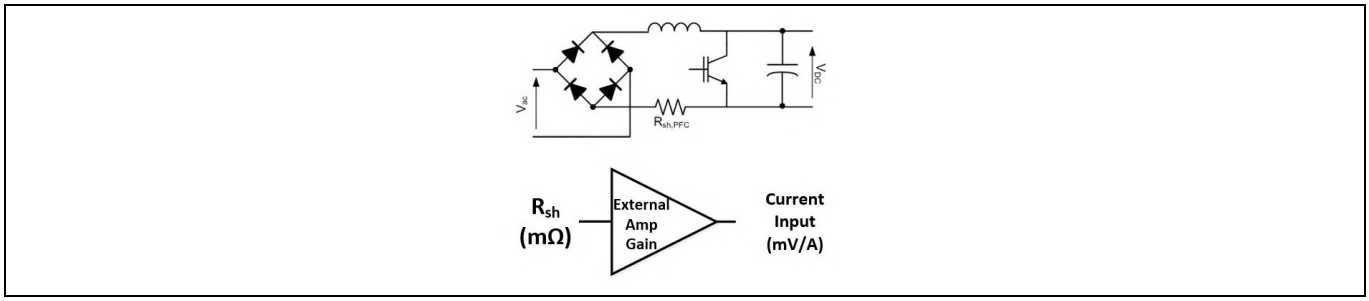

Figure 14 PFC Current shunt feedback and sample timing

Figure 15 depicts IPFC- current feedback sensing circuitry on EVAL-M3-102T Evaluation board. Please note that the default external amplification gain is less than 1 for current sense in this Evaluation board.

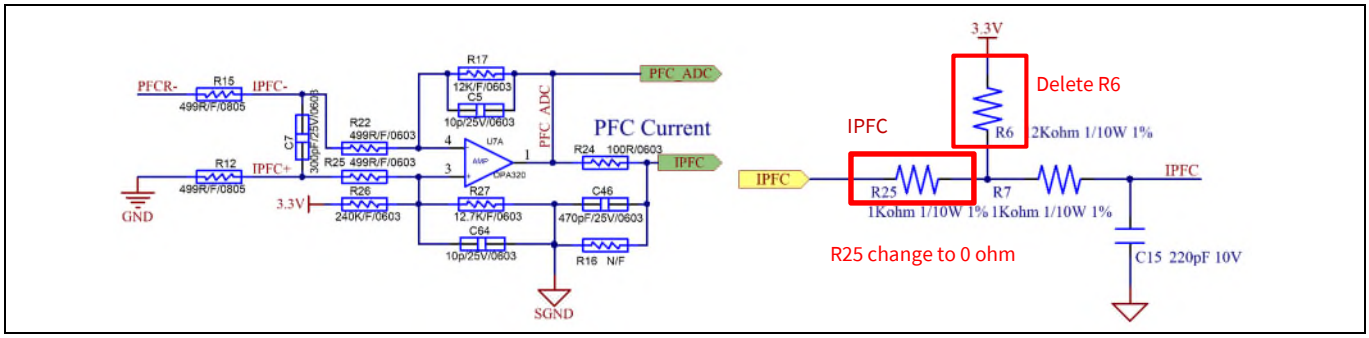

Figure 15 The PFC Current feedback circuit for EVAL-M3-102T Evaluation board

$$Gain = \frac{R_{17}}{R_{15} + R_{22}} = 12$$

Based on this calculation, the PFC current measurement input scaling of EVAL-M3-IM564 is 120 mV/A. Please use same procedure to calculate the current input for other combinations of MADK boards and enter it into MCEWizard.

5.1.4 PFC Overcurrent protection circuit and PFC Gatekill configuration

OCP1 of PFC protection circuit for EVAL-M3-IM564 as shown in Figure 16, the PFC current sensing input polarity is non-inveting, so please reset the protection reference voltage of EVAL-M3-102T evaluation board.

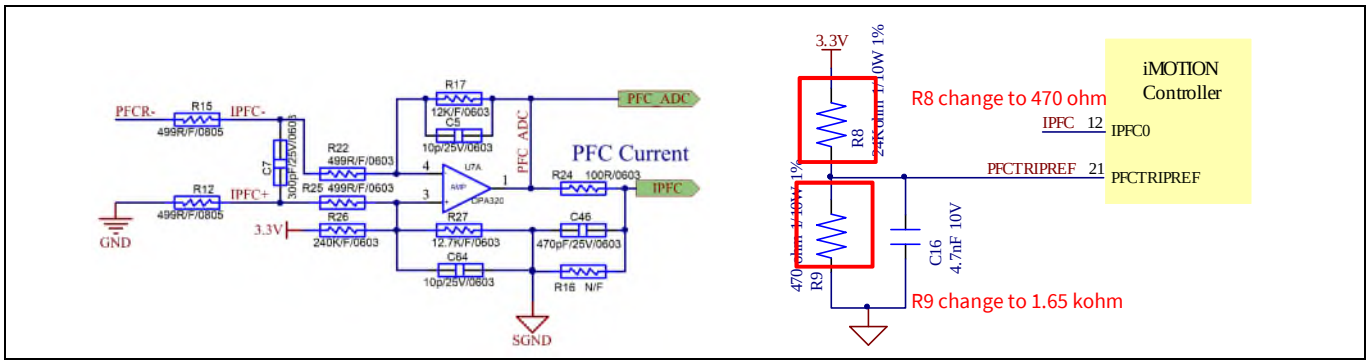

Figure 16 PFC OCP1 on the EVAL-M3-IM564 Evaluation board

For example:

If R8=470 ohm and R9=1.65 kohm, then $V_{PFCTRIPREF}$=2568 mV, The PFC cycle by cycle current limit is as follows,

$$I_{OCP1} = \frac{V_{REF} - V_{offset}}{Gain * R_s}$$

Where

$$I_{OCP1} = \frac{2568\,mV - 166\,mV}{12 * 10} = 20\,A_{peak}$$

If larger PFC current protection setting value needed, please modify the R8 and R9 of EVAL-M3-102T board and refer to the control board's user manual for more details.

OCP2 of PFC protection circuit for EVAL-M3-IM564 as shown in Figure 17, Please attention that for control board EVAL-M3-102T, it doesn't use the external PFC gatekill signal PFCGK. This MADK board connects the PFCGK to the motor GK temporarily for PFC overcurrent protection when using control board EVAL-M3-102T.

Note: PFC Overcurrent protection circuit just generates the signal of PFCGK, and there is no more action for EVAL-M3-IM564. The power board will not turn off the PFC gate driver IC if the control board doesn't do anything when PFCGK is active.

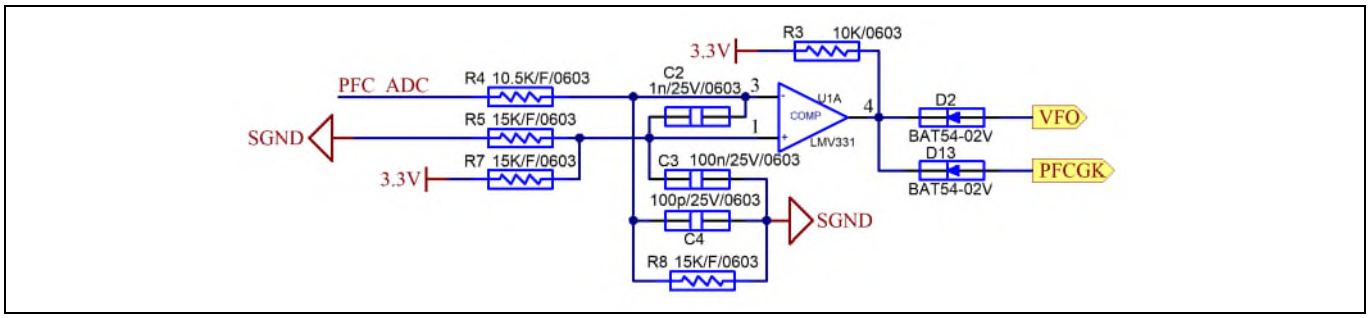

Figure 17 The PFCTRIPREF Circuit on the EVAL-M3-102T Evaluation board

The calculation formula is as follows,

$$\frac{I_{OCP2} \times RS_3 \times Gain + V_{offset}}{\frac{R_8}{R_4 + R_8}} = 3.3 \times \frac{R_5}{R_7 + R_5}$$

Where

$$I_{OCP2} = \frac{3.3 \times \frac{R_5}{R_7 + R_5} \times \frac{R_8}{R_4 + R_8} - V_{offset}}{RS_3 \times Gain} = 22\ A_{peak}$$

If larger PFC current protection setting value needed, please reconfigure the adapting comparator threshold divider resistor R5/R7 or R4/R8.

5.2 Inverter section using CIPOS™ mini IPM

The inverter section is also implemented using the CIPOS™ mini IPM as sketched in Figure 18. The inverter section of IPM module includes an optimized SOI gate driver and a three-phase inverter consisting of TRENCHSTOP™ IGBTs and anti parallel diodes.

The three pairs of capacitors C14 and C15, C16 and C17, C22 and C23 are used as bootstrap capacitors to provide the necessary floating supply voltages V_{BS1}, V_{BS2} and V_{BS3} respectively.

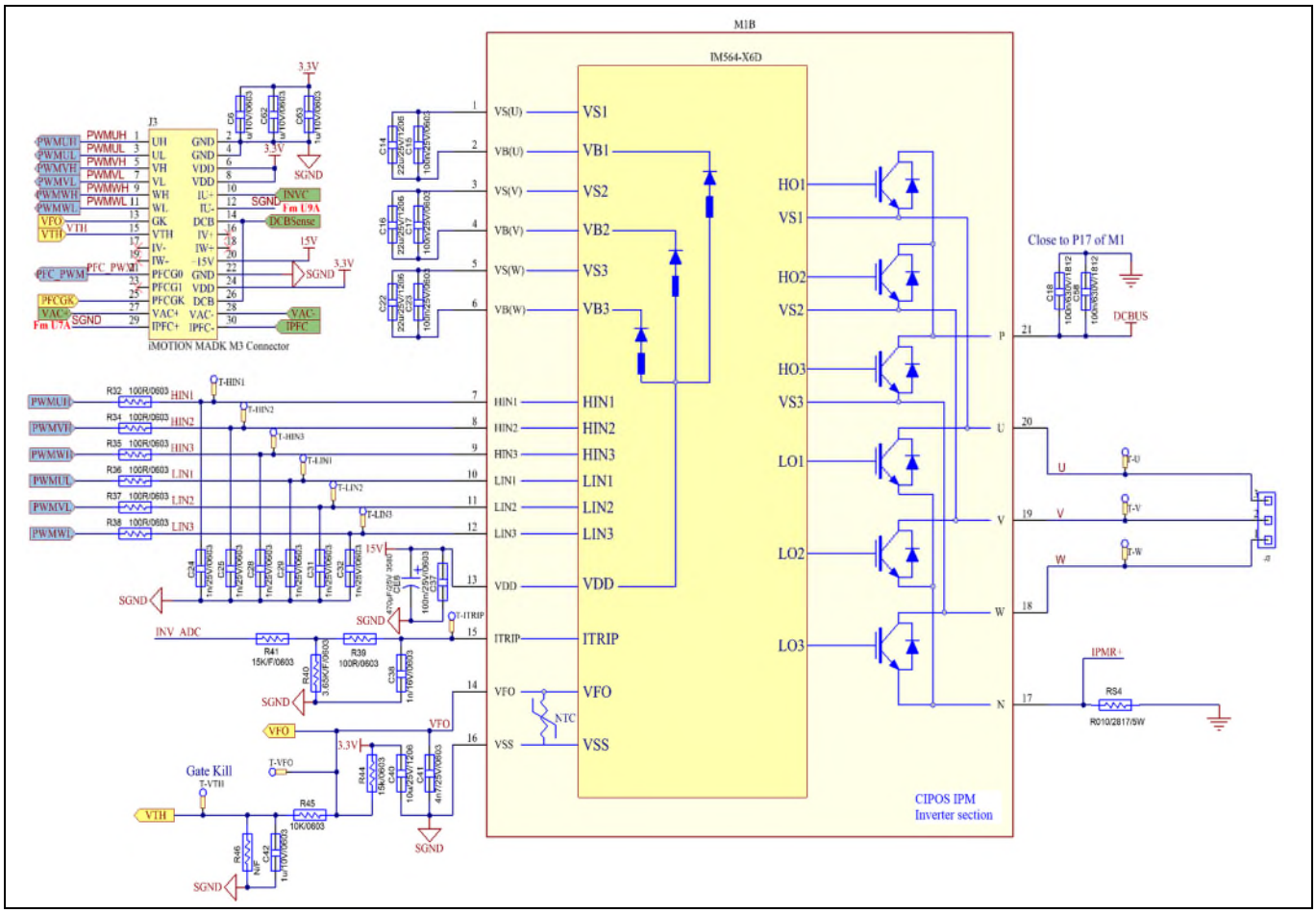

Figure 18 Schematic of the 3-phase inverter section using CIPOS™ mini IPM on EVAL-M3-IM564

5.2.1 DC bus sensing and MCEWizard configuration

Pin 14 and pin 26 of connector J3 provide access to the DC-link voltage DCBsense. Three possible feedback cases are associated with these pins. Figure 19 provides the DC bus sense resistor details. By default, the resistor R21 is not mounted on EVAL-M3-IM564. There must be a pull-down resistor mounted on the corresponding controller board.

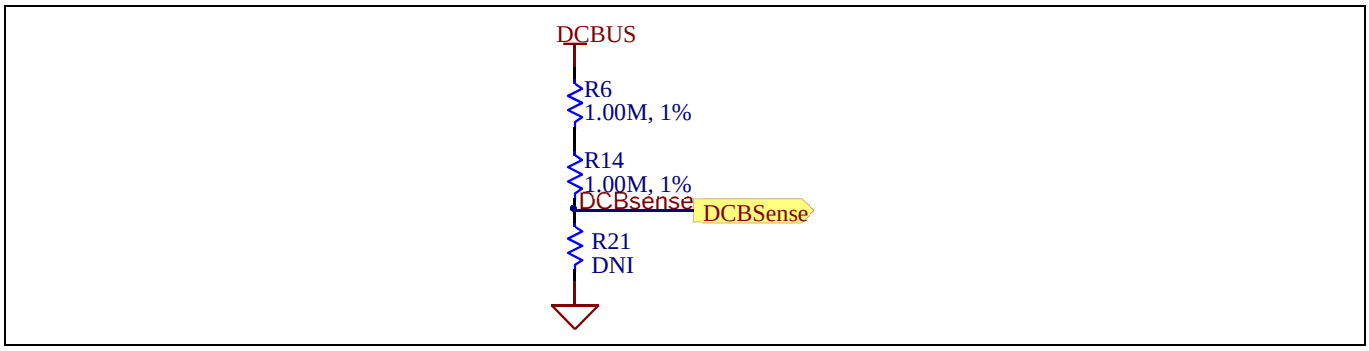

Figure 19 DC bus sense resistor on EVAL-M3-IM564 Evaluation board

If a pull down resistor of 13.3 kΩ referred to ground is inserted either on the EVAL-M3-IM564 Evaluation board or on the control board, the DCBSense voltage results in the range of 0 to 3.3 V on the pin reflecting a DC bus voltage range of 0 to 420 V.If a pull down resistor of 13.3 kΩ is inserted on both, EVAL-M3-IM564 Evaluation board and on the control card, the DCBSense results scale to 0-1.65 V. No safety issue occurs. If no feedback is desired on the DCBSense pin, R6 or R14 should be removed to avoid high voltage on the connector.

The high side resistors R6 and R14 for the DC bus sensing resistor divider on the controller board EVAL-M3-IM564 are 2000kΩ, and should be configured in MCEWizard as shown in Figure 20. For the low side resistor value, please refer to the User Manual of the corresponding control board (typical is 13.3K).

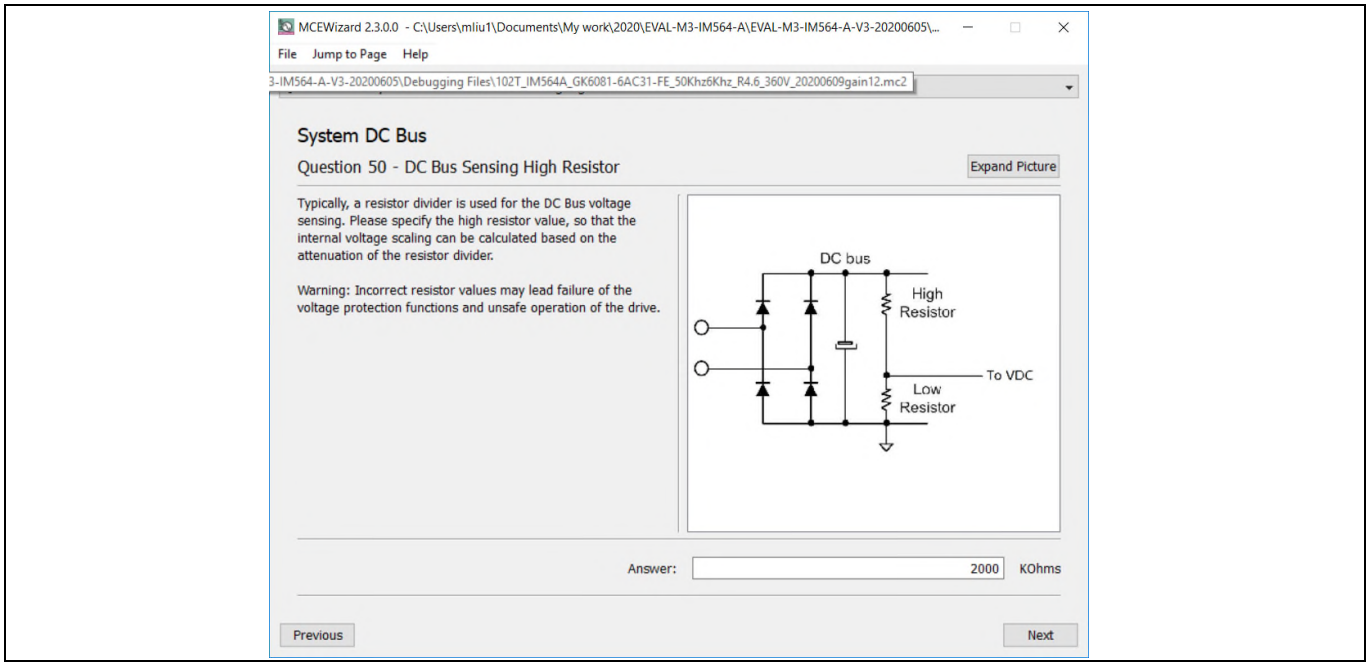

Figure 20 DC bus sensing configuration in MCEWizard

5.2.2 Motor External Current feedback configuration and calculation

The current input value is product of the shunt resistance in milliohms and gain of External current sense amplifier for EVAL-M3-102T as shown in Figure 21.

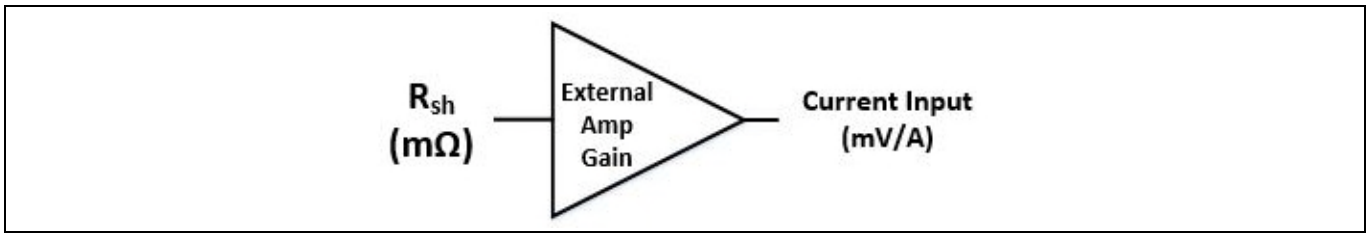

Figure 21 Current shunt feedback and sample timing for EVAL-M3-102T

The External Amplifier Gain circuit can be found in the schematics or User Manual for the control board (For example, EVAL-M3-102T see Figure 22).

Figure 22 depicts IU+ current feedback sensing circuity on EVAL-M3-102T Evaluation board. Please note that the default external op-amp of EVAL-M3-IM564 board, so the following circuit modifications are recommended for EVAL-M3-102T board in order to clearly amplifier Gain. Delete R10, and R13 change to 0 ohm of EVAL-M3-102T board.

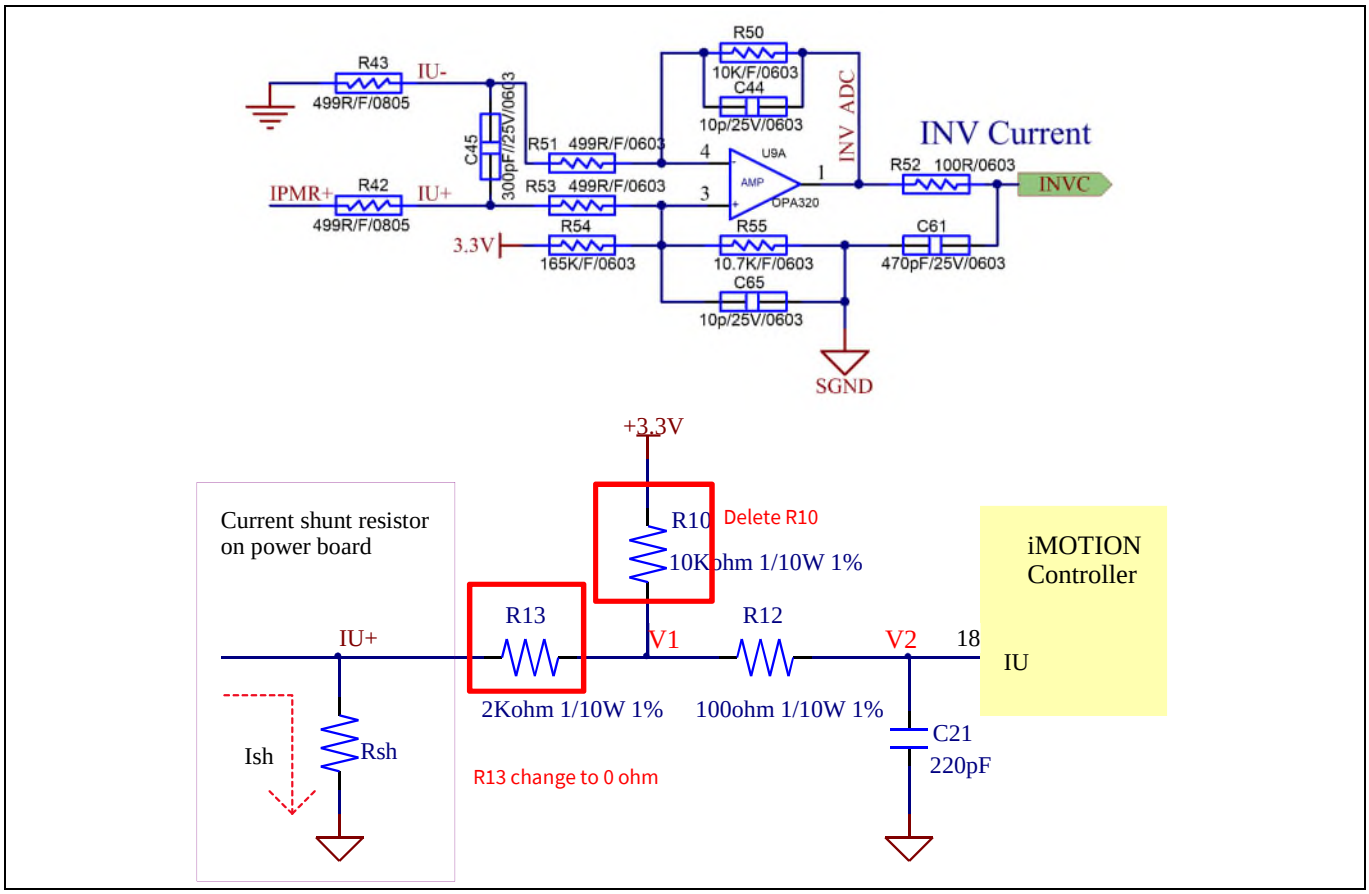

Figure 22 The part of Current feedback on the EVAL-M3-102T Evaluation board

$$Gain = \frac{R_{50}}{R_{43} + R_{51}} = 10$$

Based on this calculation, the motor current input scaling of EVAL-M3-IM564 is 100 mV/A. Please use same procedure to calculate the current input for other combinations of MADK boards and enter it into MCEWizard.

The MCEWizard setting as shown in Figure 23.

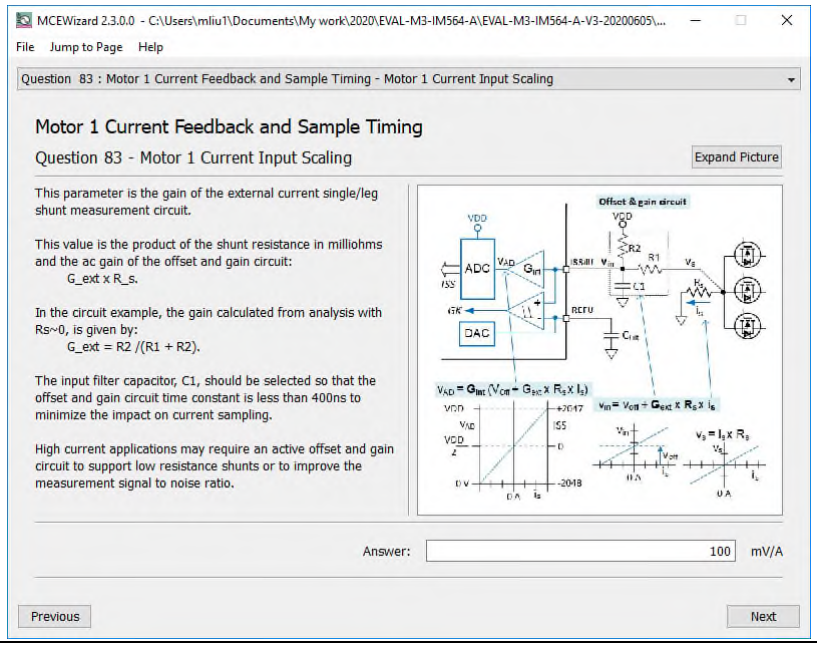

Figure 23 Current feedback configuration in MCEWizard for EVAL-M3-102T and EVAL-M3-IM564

5.2.3 Inverter Overcurrent protection and Motor Gatekill configuration

Figure 24 displays the overcurrent protection circuitry. The current sensing signal INV_ADC is connected to ITRIP via the threshold diliver resistor R41/R40, and ITRIP is filtered through capacitor C38.

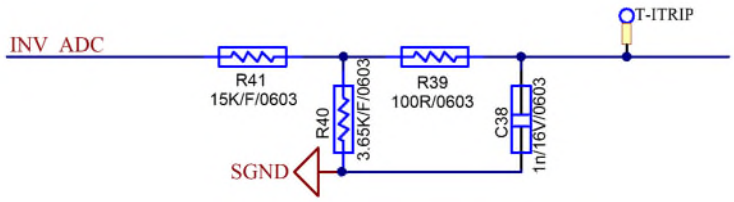

Figure 24 Overcurrent protection circuit on the EVAL-M3-IM564 Evaluation board

The typical value of ITRIP positive going threshold $V_{IT,TH+}$ is 525mV. So the inverter output peak current is calculated by

$$I_{trip} = \frac{V_{IT,TH+} \times \frac{R_{41} + R_{40}}{R_{40}} - V_{offset}}{R_{shunt} \times Gain}$$

If the motor peak current larger than the setting value I_{trip} for more than ITRIP Input filter time, VFO will be trigger low which is mean that the signal Gatekill is active. For iMOTION™ IMC1xx control IC, there are three

types of Gatekill Input Source (as shown in Figure 25). For Gatekill Input Source configured Gatekill-Pin or Both, iMOTION™ control IC will stop the Motor when the signal GateKill is active.

In order to get high power output for this MADK board, the board uses a very low resistance R_{shunt} with 10 mΩ, the inverter overcurrent protection signal (Gatekill) comes from an external comparator (U8). The ITRIP of IPM doesn't used any more.

But please note that, if select comparator for Gatekill Input Source, the external Gatekill signal will be not used. And the current sensing signal I_Shunt will be compared by the internal comparator with the "Gatekill Comparator Reference" value set in MCEWizard only.

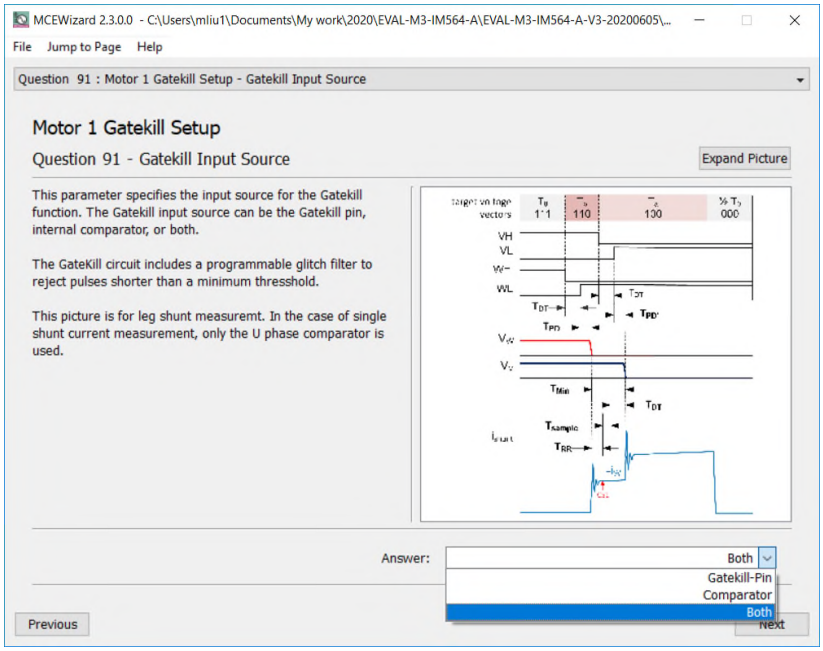

Figure 25 Gatekill configuration in MCEWizard for EVAL-M3-102T

5.3 Thermistor/NTC Characteristics and protection calculation

This board provides Thermistor/NTC output on pin 15 of the 30 pins connector J3. Temperatures can be calculated by resistor measurement.

5.3.1 CIPOS™ Internal NTC – Thermistor Characteristics

The thermistor characteristics for CIPOS™ mini IPM with build in NTC are listed as summarized in Table 7.

Table 7 CIPOS™ Internal NTC – Thermistor Characteristics

Description	Condition	Symbol	Value			Unit
			min	typ	max	
Resistor	T_{NTC} = 25°C	R_{NTC}	79.638	85.000	90.362	kΩ
Resistor	T_{NTC} = 50°C	R_{NTC}	28.400	29.972	31.545	kΩ
Resistor	T_{NTC} = 60°C	R_{NTC}	19.517	20.515	21.514	kΩ
Resistor	T_{NTC} = 70°C	R_{NTC}	13.670	14.315	14.960	kΩ
Resistor	T_{NTC} = 80°C	R_{NTC}	9.745	10.169	10.593	kΩ
Resistor	T_{NTC} = 90°C	R_{NTC}	7.062	7.345	7.628	kΩ

Description	Condition	Symbol	Value			Unit
			min	typ	max	
Resistor	T_{NTC} = 100°C	R_{NTC}	5.199	5.388	5.576	kΩ
Resistor	T_{NTC} = 110°C	R_{NTC}	3.856	4.009	4.163	kΩ
Resistor	T_{NTC} = 120°C	R_{NTC}	2.900	3.024	3.149	kΩ
Resistor	T_{NTC} = 125°C	R_{NTC}	2.527	2.639	2.751	kΩ
B-constant of NTC		B(25/100)		4092		K

The VFO pin of CIPOS™-Modules provides direct access to the NTC, which is referenced to VSS. An external pull-up resistor connected to +3.3V ensures that the resulting voltage can be directly connected to the microcontroller.

Figure 26 depicts the CIPOS™ internal circuit at pin VFO. An external pull-up resistor is required to bias the NTC.

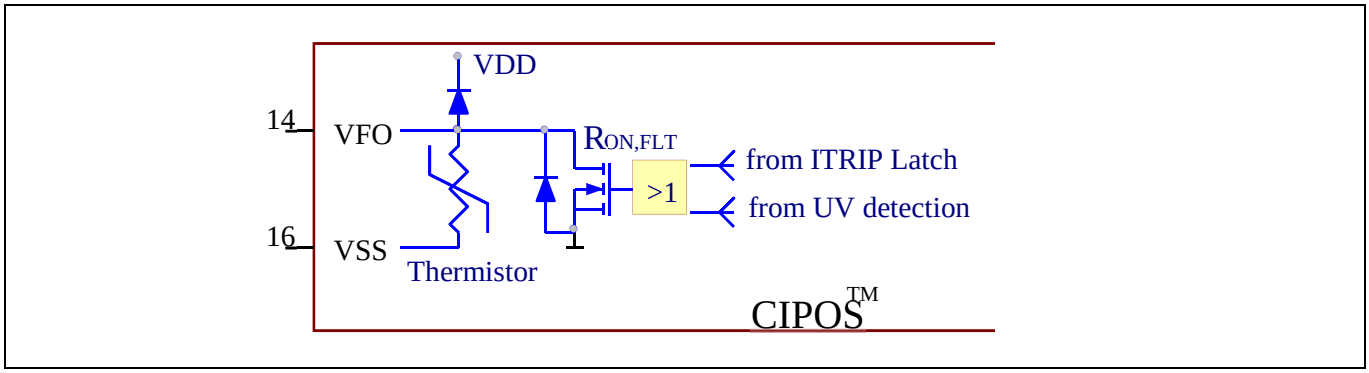

Figure 26 Internal circuit at pin VFO for CIPOS™ IPM IM564-X6D/IM564-X6DS

5.3.2 Overtemperature Hardware Protection Circuit

The VFO pin not only provides direct access to the NTC, but also indicates a module failure in case of under voltage at pin VDD or in case of triggered overcurrent detection at ITRIP. In this Evaluation design kits EVAL-M3-IM564 and EVAL-M3-102T, the VFO pin is directly connected to the Gatekill pin for controller IC IMC102T.

But for iMOTION™ 100series control board, the maximum input low voltage of Gatekill for IRMCF1xx is 0.8V. And NTC thermal resistor is about 3.0 kΩ at 120°C. The resistors R44 and R45 for the power board EVAL-M3-IM564 are chosen properly to make sure the voltage of VFO is 0.8V at 120°C. And then the Gatekill will ask the microcontroller to stop generating PWM pulses if the temperature of NTC continues to rise.

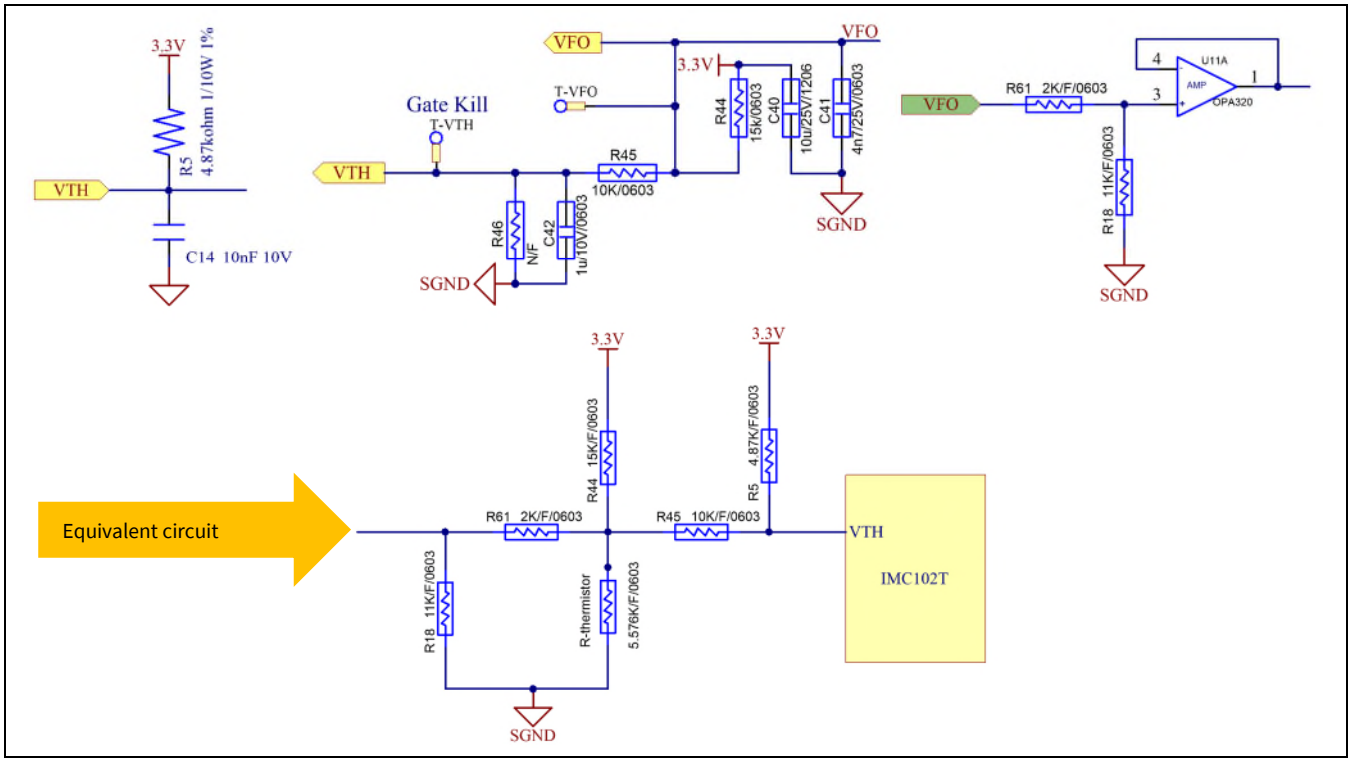

Figure 27 Overtemperature protection circuit schematic for EVAL-M3-IM564 and EVAL-M3-102T

5.3.3 NTC shutdown value calculation and configuration

External NTC Temperature shutdown value can be calculated as shown below and configured in MCEWizard as shown in Figure 28. For pull-up resistor on Evaluation control board, please refer to the control board's User Manual. For example, for EVAL-M3-102T, the pull-up resistor on the control board is 4.87kΩ. The value of resistors R44 and R45 on EVAL-M3-IM564 are 9.1 kΩ and 10 kΩ (see Figure 27). The typical value of R_{NTC} at 100°C is 5.388kΩ for IPM IM564-X6D/IM564-X6DS which is used in EVAL-M3-IM564.

$$V_{FO} = \frac{\frac{R_{NTC@setting\ temperature} \times (R_{61} + R_{18})}{R_{NTC@setting\ temperature} + (R_{61} + R_{18})}}{\frac{R_{NTC@setting\ temperature} \times (R_{61} + R_{18})}{R_{NTC@setting\ temperature} + (R_{61} + R_{18})} + \frac{R_{44} \times (R_{45} + R_5)}{R_{44} + (R_{45} + R_5)}} \times V_{DD}$$

$$V_{TH} = \frac{R_{45} \times V_{DD} + R_5 \times V_{FO}}{R_{45} + R_5}$$

If the setting temperature is 100°C, $R_{NTC@setting\ temperature}$ =5.576 kohm, the shutdown value should be 2.33V. If the setting temperature is 80 °C, $R_{NTC@setting\ temperature}$ =10.593 kohm, the shutdown value should be 2.36V.

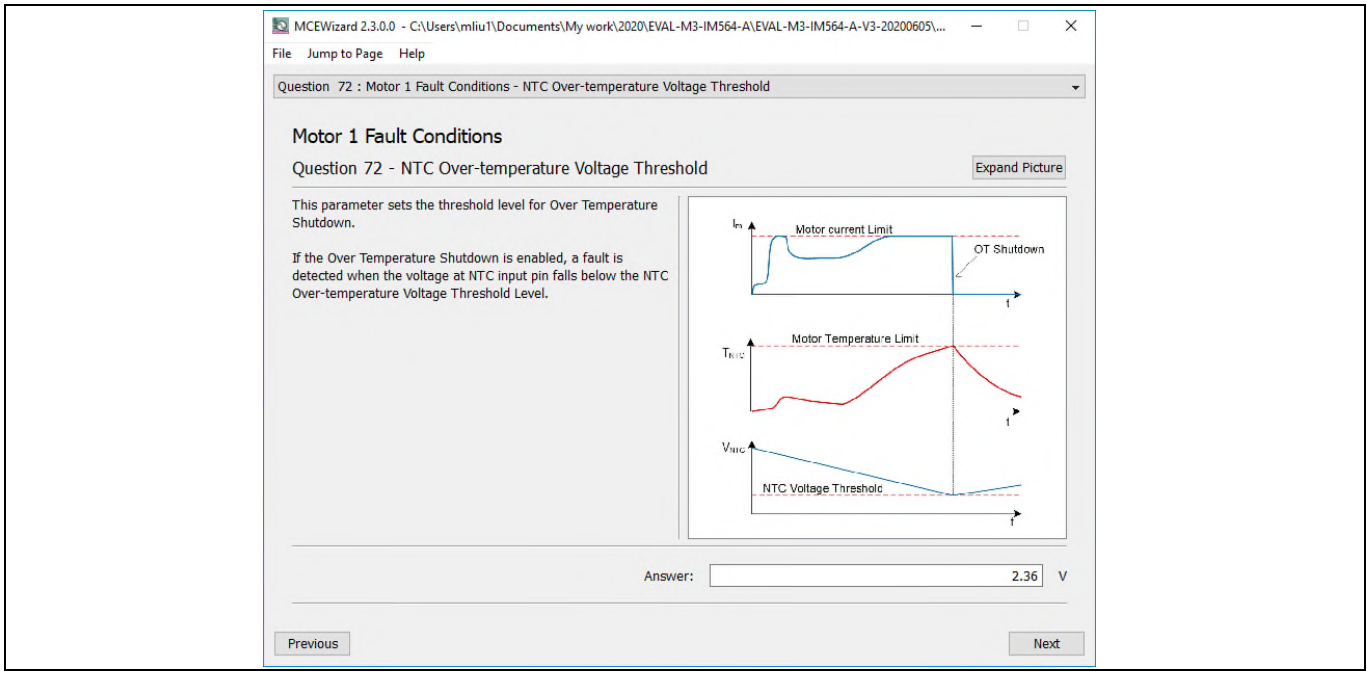

Figure 28 External temperature sense input configuration in MCEWizard

5.4 System thermal resistance testing

5.4.1 Heatsink thermal resistance

In order to test the thermal impedance of heatsink to ambient R_{thCA}, DC souce is used to conduct the IPM internal diodes as the shown in Figure 29. With the DC souce voltage increasing, current through IPM I_{IPM} and voltage on IPM V_{IPM} are monitored by current and voltage meter, IPM case temperature test point is between IPM and heasink as shown in Figure 29 below, the same as Tc point of inverter IGBT of the IPM daasheet [1].

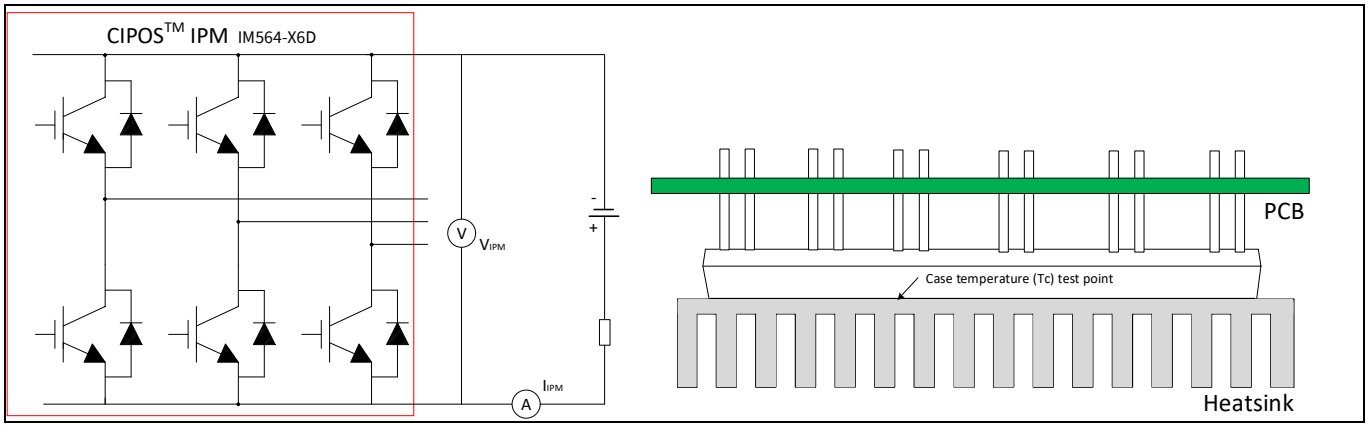

Figure 29 Heatsink thermal testing set-up

Thermal resistance between junction to ambient R_{thJA} is divided into 2 parts as following formular, thermal resistance between junction to case R_{thJC} and thermal resistace between case to ambient R_{thCA}.

$$R_{thJA} = R_{thJC} + R_{thCA}$$

And them we could get the formular as follows.

$$R_{thCA} = \frac{\Delta T_{CA}}{P_{D.tot}} = \frac{T_C - T_A}{V_{IPM} \times I_{IPM}}$$

Acoording to the test set up, test result is shown in the Figure 30 below. The IPM case temperature is detected about 1 hours until the temperature is stable.

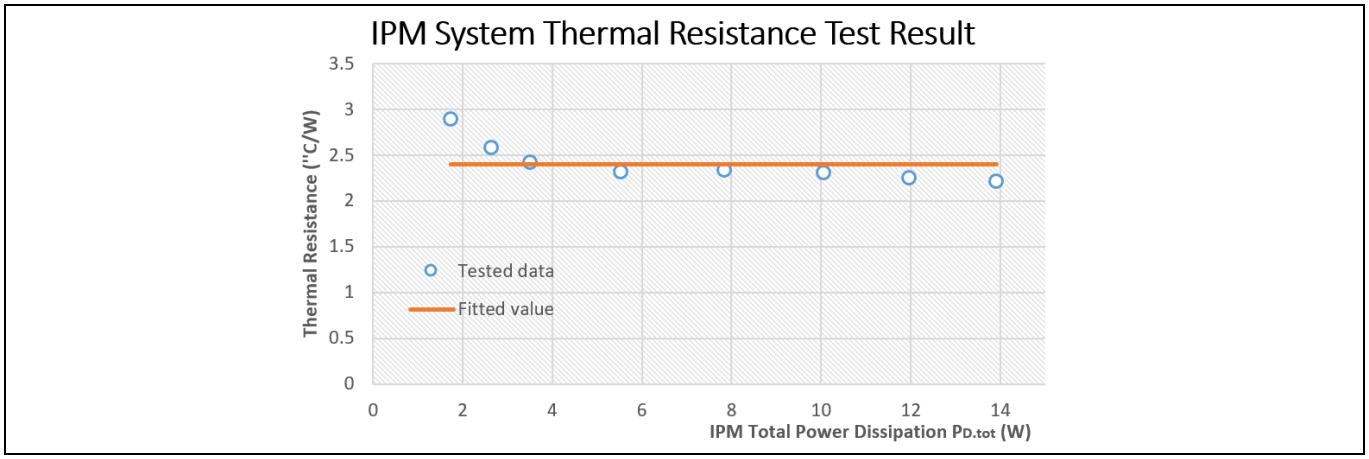

Figure 30 Heatsink thermal testing result

So, we could roughly get the final case to ambient resistance value as:

$$R_{thCA} = 2.4℃/W$$

Please note that thermal resistance calculated with fan voltage = 10V. For higher power capability, fan input voltage can be increased up to 15V by U10 (IFX91041EJV, DC-DC voltage regulator), which control the fan voltage based on PFC current sensing Op-amp output voltage.

5.4.2 System power output capability

In order to test the total ouput power capability of the MADK system as Figure 2, DCB case temperature is tested with different MADK output power.

Test conditions are: Ambientent temperature Ta=25℃, AC input voltage is VAC=220V/50Hz, Bus voltage is VDC=380V, PFC PWM frequency is 50 KHz and inverter frequency is 6 KHz.

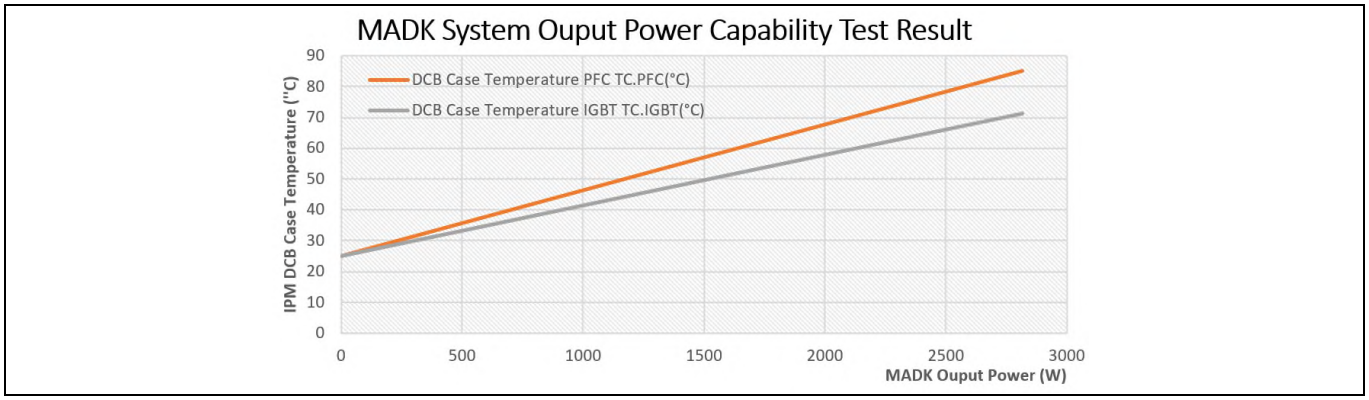

Figure 31 MADK Ouput Power Capability Test Result

With the MADK output power increasing, IPM DCB PFC test point and IGBT test point temperature are monitored, final test result are shown as Figure 31.

5.5 Auxiliary power supply

Figure 32 depicts the schematic of the auxiliary power supply for the EVAL-M3-IM564 board. The circuit includes an ICE5QR4770AG that is used to generate 15 V and 6V through QR flyback topology from the DC bus.

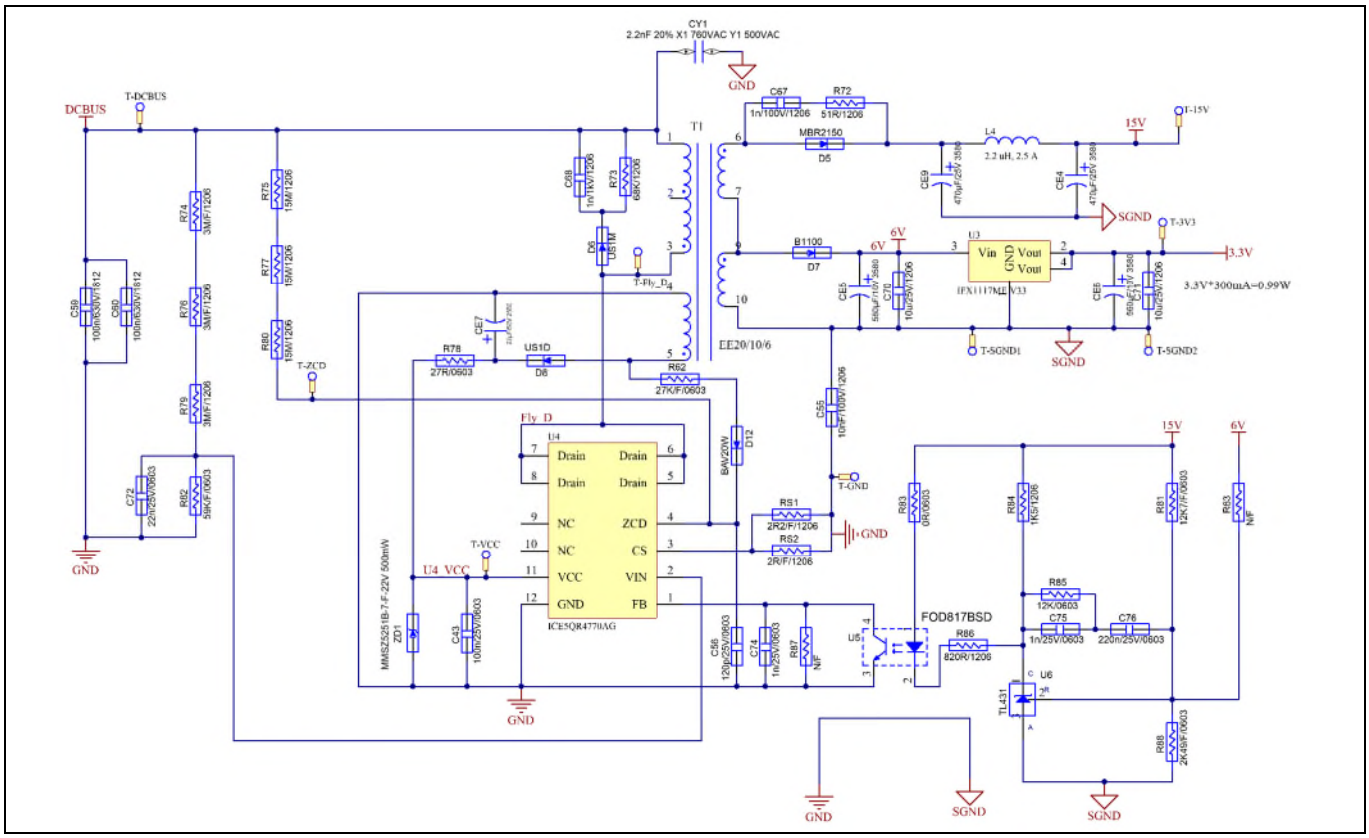

Figure 32 Power supply section of the EVAL-M3-IM564 Evaluation board

The linear voltage regulator IFX1117ME V33 generates 3.3 V from 6V power supply. The 3.3 V power supply is used in the PFC overcurrent comparator circuit and overtemperature hardware protection circuit. Both 15V and 3.3 V are also present on the 30 pins iMOTION™ MADK-M3 interface connector J3 to power circuitry on the control board.

5.6 Schematics for EVAL-M3- IM564

The PFC setion schematic for EVAL-M3- IM564 is provided in Figure 33.

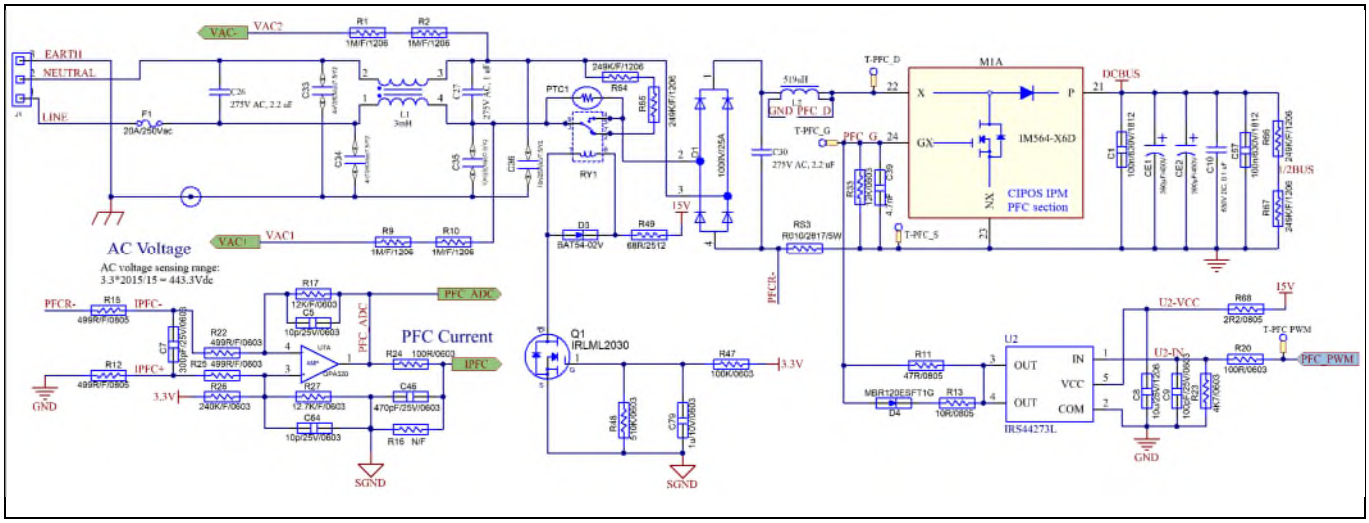

Figure 33 PFC Section Schematics for EVAL-M3- IM564

The Inverter setion schematic for EVAL-M3- IM564 is provided in Figure 34.

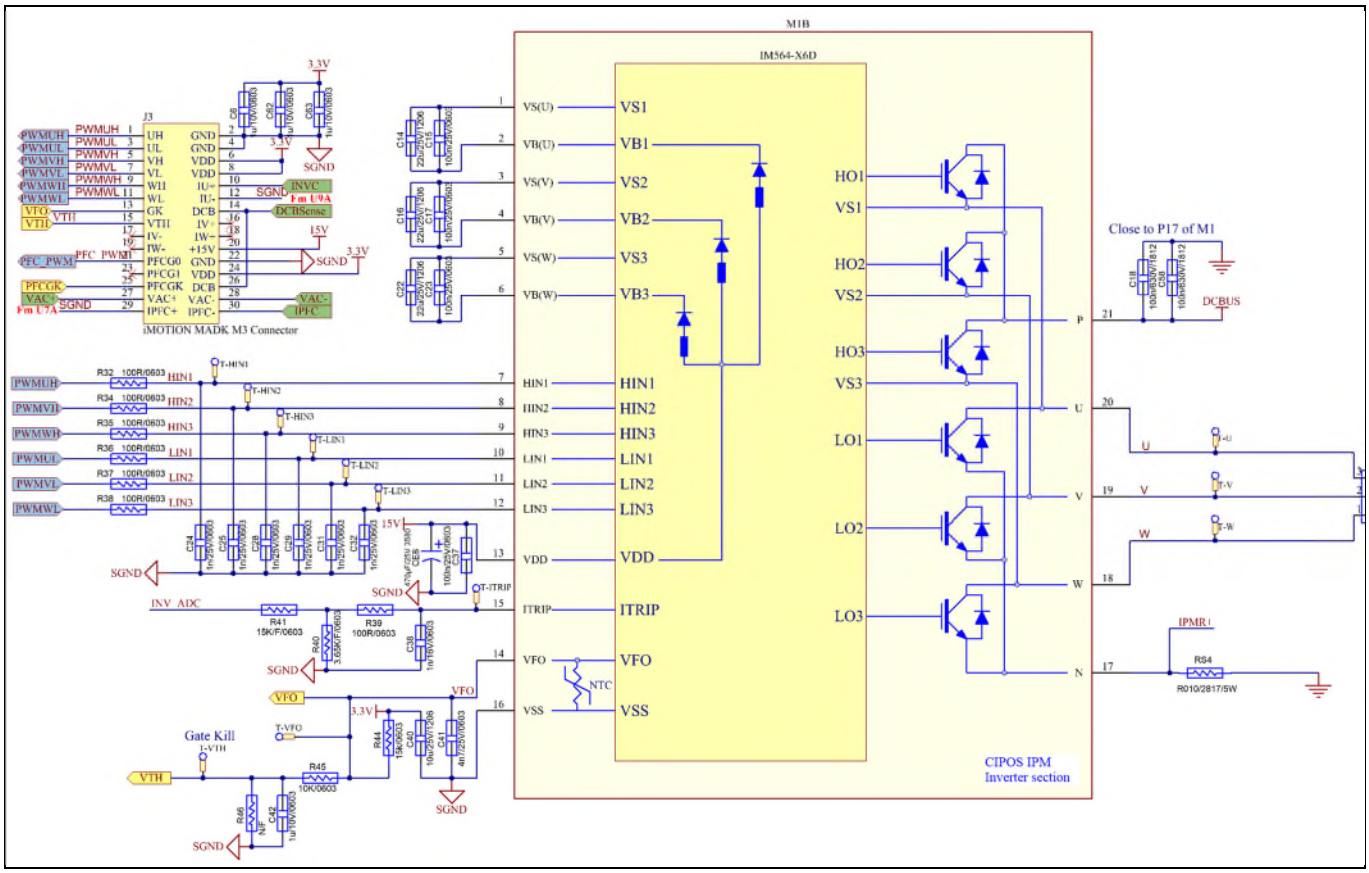

Figure 34 Inverter Section Schematics for EVAL-M3- IM564

The Auxiliary Power Supply setion schematic for EVAL-M3- IM564 is provided in Figure 35.

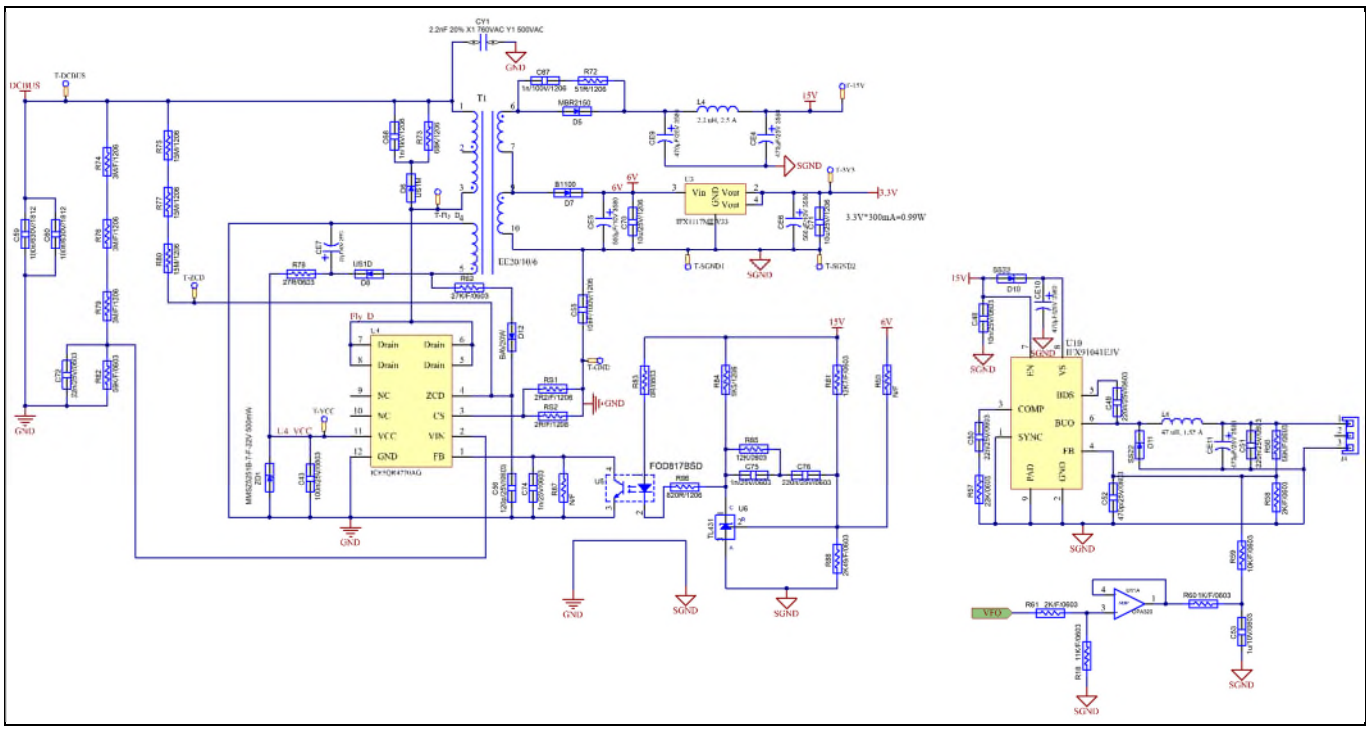

Figure 35 Auxiliary Power Supply Section Schematics for EVAL-M3- IM564

5.7 PCB Layout for EVAL-M3- IM564

The layout of this board can be used for different voltage or power classes. The PCB has two electrical layers with 35µm copper by default and its size is 148 mm × 165 mm. The PCB board thickness is 1.6mm. Get in contact with our technical support team to get more detailed information and the latest Gerber-files.

Figure 36 illustrates the top assembly print of the Evaluation board.

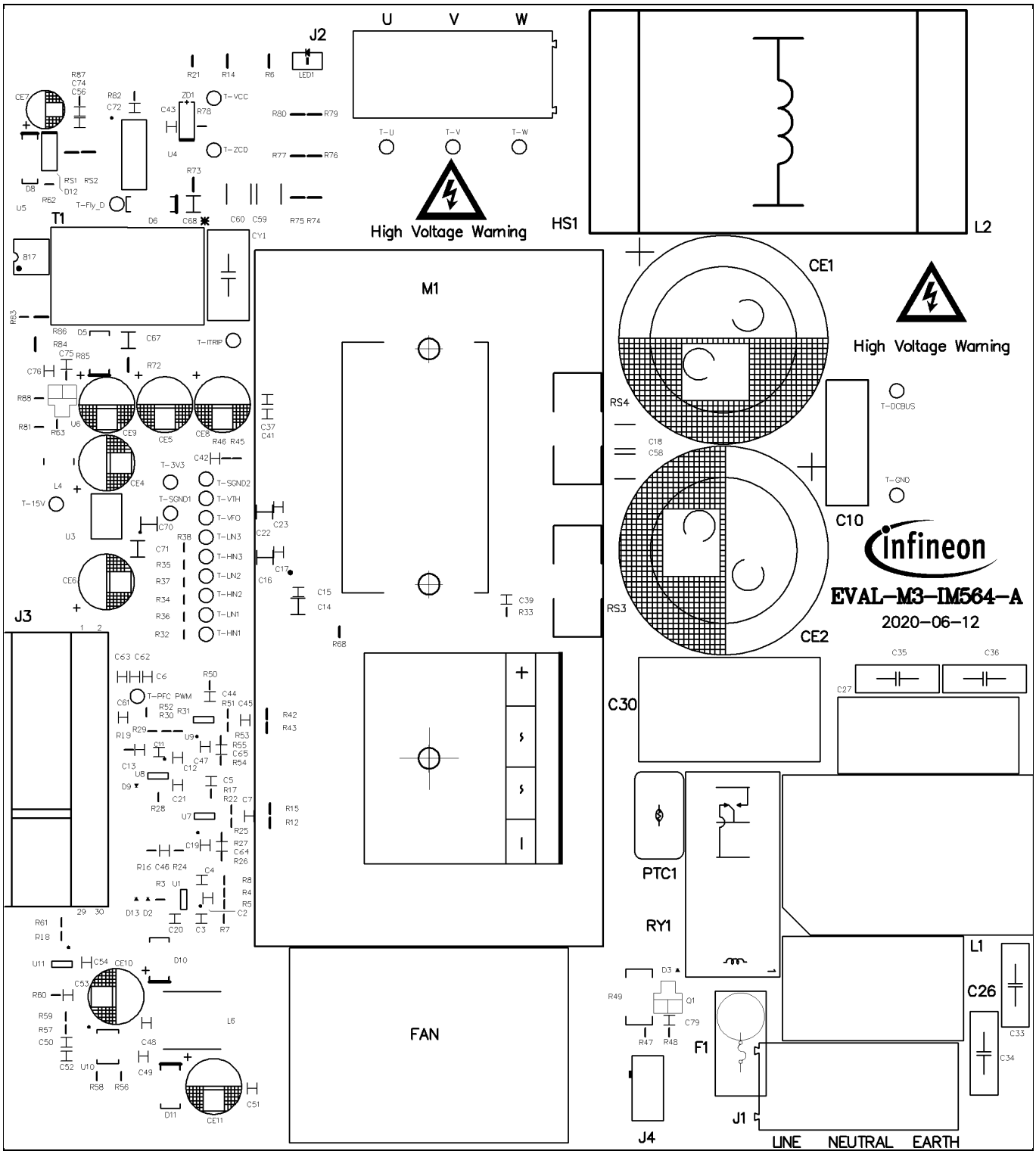

Figure 36 Top assembly print of the EVAL-M3-IM564 Evaluation board

Figure 37 depicts the bottom assembly print of the Evaluation board.

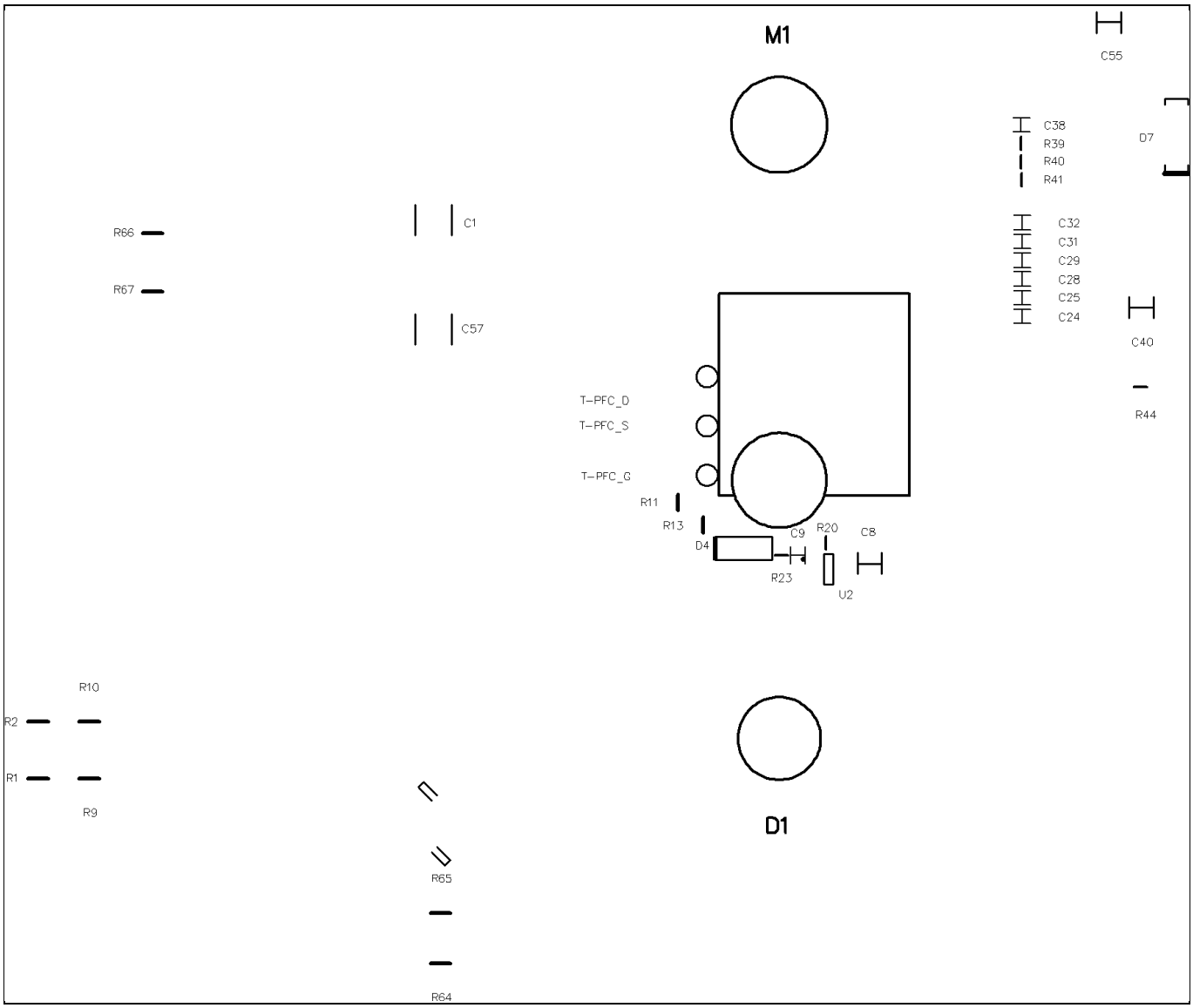

Figure 37 Bottom assembly print of the EVAL-M3-IM564 Evaluation board

The top layer routing of the PCB is provided in Figure 38.

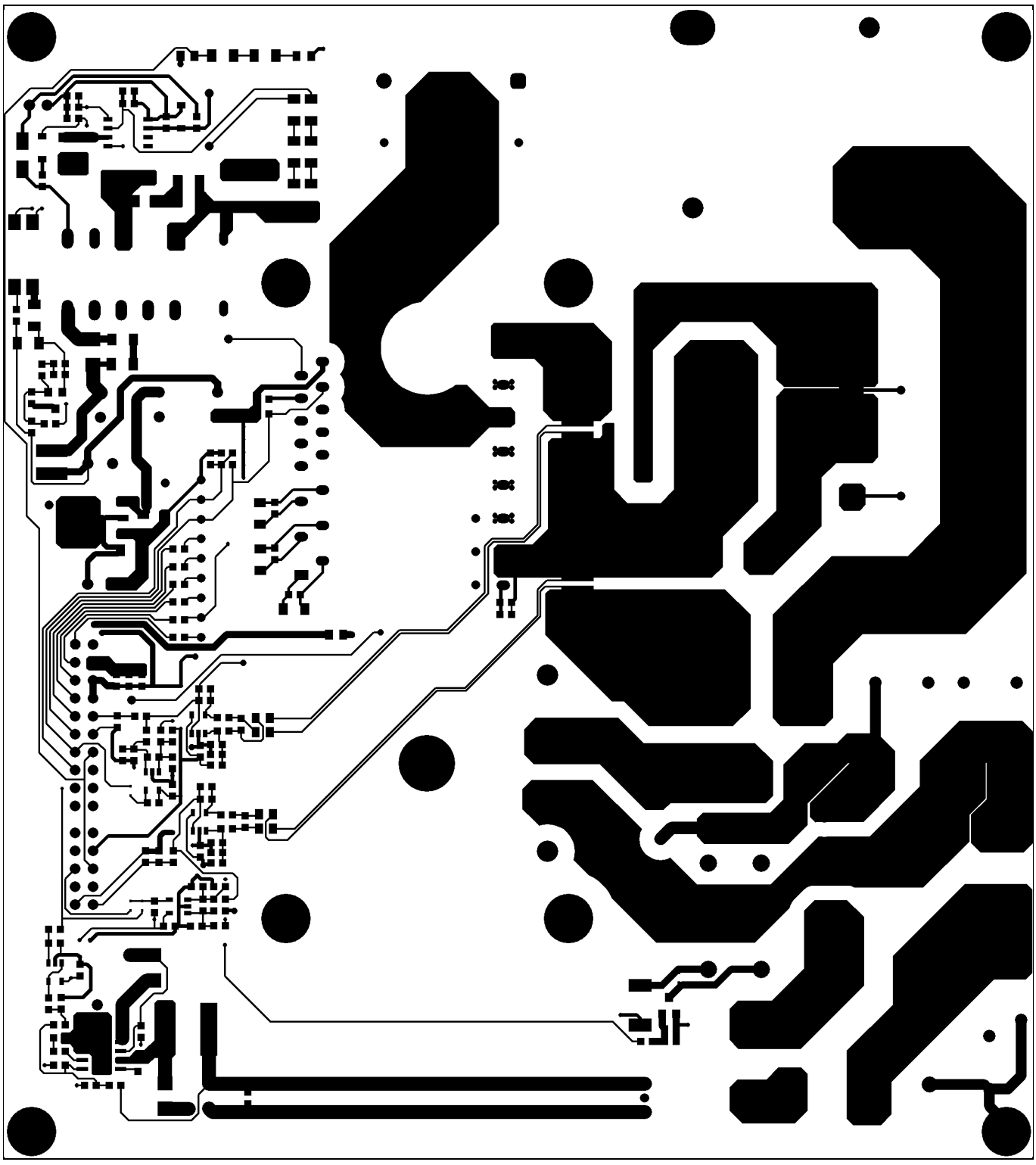

Figure 38 Top layer routing of the EVAL-M3-IM564

Figure 39 illustrates the bottom layer routing of the PCB.

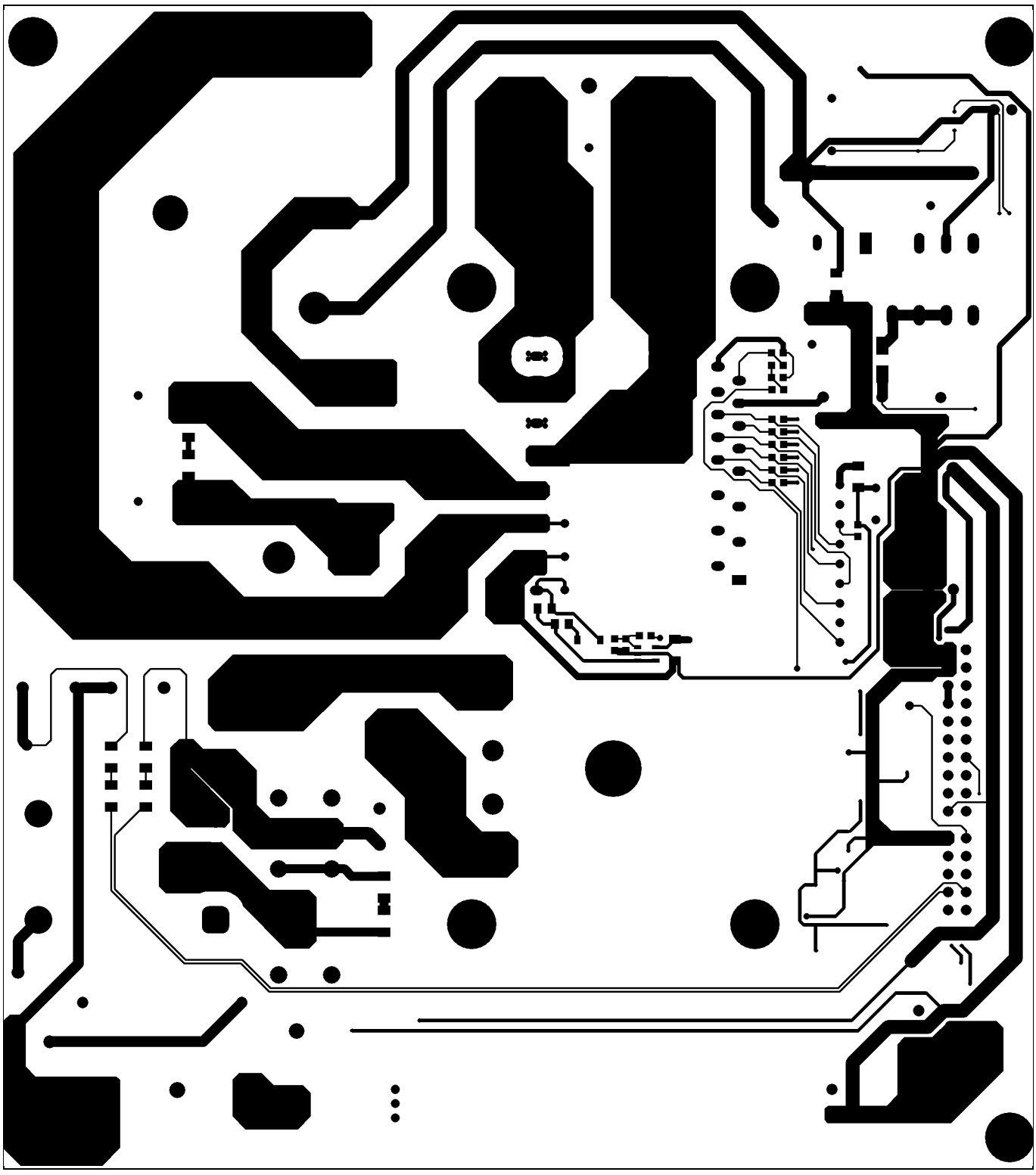

Figure 39 Bottom layer routing of the EVAL-M3-IM564

6 Bill of material

Table 8 provides the complete bill of materials for the EVAL-M3-IM564.

Table 8 Bill of materials

No.	Qty	Part description	Designator	Part number	Manufacturer
1	6	CAP CER 0.1UF 630V X7R 1210	C1, C18, C57, C58, C59, C60	C1210C104KBRAC7800	KEMET
2	10	CAP CER 1000PF 25V X7R 0603	C2, C11, C24, C25, C28, C29, C31, C32, C74, C75	885012206059	Wurth Electronics Inc.
3	3	CAP CER 100PF 25V X7R 0603	C4, C9, C13,	885012206053	Wurth Electronics Inc.
4	2	CAP CER 300PF 25V X7R 0603	C7, C45	885012208043	Wurth Electronics Inc.
5	12	CAP CER 0.1µF 25V X7R 0603	C3, C12, C15, C17, C19, C20, C21, C23, C37, C43, C47, C54	885012206071	Wurth Electronics Inc.
6	4	CAP CER 10PF 25V C0G/NP0 0603	C5, C44, C64, C65	885012006032	Wurth Electronics Inc.
7	4	CAP CER 10UF 25V X5R 1206	C8, C40, C70, C71	885012108021	Wurth Electronics Inc.
8	1	0.1µF Film Capacitor 630V Polyester	C10	890303425004CS	TDK Corporation
9	3	CAP CER 22UF 25V X5R 1206	C14, C16, C22	TMK316BBJ226ML-T	Taiyo Yuden
10	2	CAP FILM 2.2UF 10% 275VAC RADIAL	C26, C30	890324026034CS	Wurth Electronics Inc.
11	1	1µF Film Capacitor 275V Polypropylene	C27	890324026027CS	Wurth Electronics Inc.
12	2	CAP CER 4700PF 250VAC Y5U RADIAL	C33, C34	ECK-DNA472ME	Panasonic Electronic Components
13	2	CAP CER 10000PF 440VAC Y5V RDL	C35, C36	ECK-ATS103MF6	Panasonic Electronic Components
14	1	CAP 2.2nF 20% X1 760VAC Y1 500VAC	CY1	AY1222M47Y5UC63L0	
15	3	CAP CER 0.022UF 25V X7R 0603	C38, C50, C72	885012206067	Wurth Electronics Inc.
16	2	CAP CER 4700PF 25V X7R 0603	C39, C41	885012206063	Wurth Electronics Inc.
17	6	CAP CER 1UF 10V X5R 0603	C42, C53, C79, C6, C62, C63	885012106010	Wurth Electronics Inc.

No.	Qty	Part description	Designator	Part number	Manufacturer
18	1	CAP CER 10000PF 25V X7R 0603	C48	885012206065	Wurth Electronics Inc.
19	3	CAP CER 0.22UF 25V X5R 0603	C49, C51, C76	885012106019	Wurth Electronics Inc.
20	3	CAP CER 470PF 25V X7R 0603	C46, C52, C61	885012206057	Wurth Electronics Inc.
21	1	CAP CER 1000PF 1000V X7R 1210	C68	885342209006	Wurth Electronics Inc.
22	1	CAP CER 10NF 1000V X7R 1210	C55	CGA6P1C0G3A103J250AC	TDK
23	1	CAP CER 120PF 50V NPO 0805	C56	CC0805GRNPO9BN121	Yageo
24	1	CAP CER 1000PF 100V X7R 0805	C67	885012207116	Wurth Electronics Inc.
25	2	CAP ALUM 390UF 20% 450V SNAP	CE1, CE2	861011485019	Wurth Electronics Inc.
26	5	CAP ALUM 470UF 20% 450V SNAP	CE4,CE8, CE9, CE10, CE11	860010474013	Wurth Electronics Inc.
27	2	CAP ALUM 560UF 20% 25V RADIAL	CE5, CE6	860010274012	Wurth Electronics Inc.
28	1	CAP 22 UF 20% 50 V	CE7	860010672010	Wurth Electronics Inc.
29	1	BRIDGE RECT 1PHASE 1200V 25A GBJ	D1	GBJ2512	Diodes Incorporated
30	4	DIODE SCHOTTKY 30V 200MA SC79-2	D2, D3, D9, D13	BAT5402VH6327XTSA1	Infineon Technologies
31	1	DIODE SCHOTTKY 20V 1A SOD123L	D4	MBR120ESFT1G	ON Semiconductor
32	1	DIODE SCHOTTKY 150V 2A DO15	D5	MBR2150VGTR-E1	Diodes Incorporated
33	1	DIODE GEN PURP 1KV 1A SMA	D6	US1M-13-F	Diodes Incorporated
34	1	DIODE SCHOTTKY 100V 1A SMA	D7	B1100LB-13-F	Diodes Incorporated
35	1	DIODE GEN PURP 200V 1A SMA	D8	US1D-13-F	Diodes Incorporated
36	2	DIODE SCHOTTKY 20V 2A SMB	D10, D11	SS22T3G	ON Semiconductor
37	1	DIODE GEN PURP 150V 200MA SOD323	D12	BAV20WS-TP	Micro Commercial Co
38	1	FAN 40X28MM 12VDC TACH,PWM	FAN	9GA0412P3J01	Sanyo Denki America Inc.
39	2	CONN TERM BLOCK 3POS 9.52MM PCB	J1, J2	691 250 910 003	Wurth Electronics Inc.
40	1	HEADER 20POS SCKT R/A DL 2.54 MM & HEADER 10POS SCKT R/A DL 2.54 MM	J3	613020243121 & 613010243121	Wurth Electronics Inc.
41	1	Connector	J4	XH 2P 2.54MM	
42	1	COMMON MODE CHOKE 3MH 23A 2LN TH	L1	7448052303	Wurth Electronics Inc.
43	1	PFC INDUCTOR 519 uH +-10%	L2	ARLDC543256C521N1B	Sunlord
44	1	FIXED 2.2uH 2.5A SMD	L4	744773022	Wurth Electronics Inc.

No.	Qty	Part description	Designator	Part number	Manufacturer
45	1	FERRITE BEAD 300 OHM 0805 1LN	L5	742792035	Wurth Electronics Inc.
46	1	FIXED IND 47UH 1.55A 136 MOHM	L6	74404084470	Wurth Electronics Inc.
47	1	LED RED CLEAR 0805 SMD	LED1	150080RS75000	Wurth Electronics Inc.
48	6	RES SMD 1MΩ 1% 1/4W 1206	R1, R2, R6, R9, R10, R14	RC1206FR-071ML	Yageo
49	6	RES SMD 10kΩ 1% 1/10W 0603	R3, R28, R45, R50, R59	RC0603FR-0710KL	Yageo
50	1	RES SMD 12kΩ 1% 1/10W 0603	R17	RC0603FR-0712KL	Yageo
51	1	RES SMD 10.5K OHM 0.1% 1/10W 0603	R4	RT0603BRD0710K5L	Yageo
52	2	RES SMD 1K OHM 0.5% 1/10W 0603	R5, R60	RT0603DRD071KL	Yageo
53	6	RES SMD 15K OHM 0.5% 1/10W 0603	R7, R8, R5, R29, R41, R44	RT0603DRD0715KL	Yageo
54	1	RES SMD 240K OHM 1% 1/10W 0603	R26	RC0603FR-07240KL	Yageo
55	1	RES SMD 10 OHM 1% 1/8W 0805	R11	RC0805FR-0710RL	Yageo
56	8	RES SMD 499 OHM 0.5% 1/10W 0603	R12, R15, R22, R25, R42, R43, R51, R53	RT0603DRD07499RL	Yageo
57	1	RES SMD 4.7 OHM 5% 1/8W 0805	R13	RC0805JR-074R7L	Yageo
58	8	RES SMD 100 OHM 0.5% 1/10W 0603	R20, R32, R34, R35, R36, R37, R38, R39	RT0603DRD07100RL	Yageo
59	1	RES SMD 4.7K OHM 5% 1/10W 0603	R23	RC0603JR-074K7L	Yageo
60	3	RES SMD 0 OHM JUMPER 1/10W 0603	R24, R52, R83	RC0603JR-070RL	Yageo
61	1	RES SMD 12.7K OHM 1% 1/10W 0603	R27	RC0603FR-0712K7L	Yageo
62	1	RES SMD 10.7K OHM 1% 1/10W 0603	R55	RC0603FR-0710K7L	Yageo
63	1	RES SMD 20K OHM 1% 1/10W 0603	R30	RC0603FR-0720KL	Yageo
64	1	RES SMD 7.5K OHM 5% 1/10W 0603	R31	RC0603JR-077K5L	Yageo
65	2	RES SMD 12K OHM 5% 1/10W 0603	R33, R85	RC0603JR-0712KL	Yageo
66	1	RES SMD 9.1K OHM 5% 1/10W 0603	R44	RC0603JR-079K1L	Yageo
67	1	RES SMD 100K OHM 5% 1/10W 0603	R47	RC0603JR-07100KL	Yageo
68	1	RES SMD 510K OHM 5% 1/10W 0603	R48	RC0603JR-07510KL	Yageo
69	1	RES SMD 68 OHM 1% 2W 2512	R49	SR2512FK-7W68RL	Yageo
70	1	RES SMD 165K OHM 1% 1/10W 0603	R54	RC0603FR-07165KL	Yageo
71	1	RES SMD 56K OHM 5% 1/10W 0603	R56	RC0603JR-0756KL	Yageo
72	1	RES SMD 22K OHM 5% 1/10W 0603	R57	RC0603JR-0722KL	Yageo

No.	Qty	Part description	Designator	Part number	Manufacturer
73	9	RES SMD 2K OHM 1% 1/10W 0603	R20, R32, R34, R35, R36, R37, R38, R39, R61	RC0603FR-072KL	Yageo
74	1	RES SMD 27K OHM 5% 1/10W 0603	R21	RC0603JR-0727KL	Yageo
75	3	RES SMD 249 OHM 1% 1/4W 1206	R23	RC1206FR-07249RL	Yageo
76	3	RES SMD 2.2 OHM 5% 1/8W 0805	R24, R52, R83	RC0805JR-072R2L	Yageo
77	2	RES SMD 51 OHM 5% 1/4W 1206	R27, R55	RC1206JR-0751RL	Yageo
78	2	RES SMD 15M OHM 5% 1/4W 1206	R33, R85	RV1206JR-0715ML	Yageo
79	3	RES SMD 27 OHM 5% 1/10W 0603	R46, R63, R87	RC0603JR-0727RL	Yageo
80	1	RES SMD 3.65K OHM 1% 1/10W 0603	R40	RC0603FR-073K65L	Yageo
81	1	RES SMD 18K OHM 1% 1/10W 0603	R18	RC0603FR-0718KL	Yageo
82	1	RES 58.3K OHM 1% 1/10W 0603	R82	RN73R1JTTD5832F100	KOA Speer Electronics, Inc.
83	1	RES SMD 1.5K OHM 5% 1/4W 1206	R84	RC1206JR-071K5L	Yageo
84	1	RES SMD 820 OHM 5% 1/4W 1206	R86	RC1206JR-07820RL	Yageo
85	1	RES SMD 2.49K OHM 1% 1/10W 0603	R88	RC0603FR-072K49L	Yageo
86	1	RES SMD 2.2 OHM 5% 1/4W 1206	RS1	RC1206JR-072R2L	Yageo
87	1	RES SMD 2 OHM 1% 1/4W 1206	RS2	RC1206FR-072RL	Yageo
88	2	RES SMT 0.010 OHM 1% 5W 4320 RES SMT 0.010 OHM 1% 5W 2817	RS3, RS4	KRL50110D-C-R010-F-T1 SMT-2817-R010-5W	SUSUMU ISABELLENHUTTE
89	1	24VDC 16A 8pin	RY1	HF14FW-024-ZT	Hongfa relay
90	1	998Uh 100kHz, 100mV, Ls	EE20/10/6	750344279	Wurth Electronics Inc.
91	25	PC TEST POINT MINIATURE BLACK	T-3V3, T-15V, T-DCBUS, T-Fly_D, T-GND, T-HIN1, T-HIN2, T-HIN3, T-ITRIP, T-LIN1, T-LIN2, T-LIN3, T-PFC PWM, T-PFC_D, T-PFC_G, T-PFC_S, T-SGND1,	5001	Keystone Electronics

No.	Qty	Part description	Designator	Part number	Manufacturer
			T-SGND2, T-U, T-V, T-VCC, T-VFO, T-VTH, T-W, T-ZCD		
92	2	IC GP LV COMPARATOR SOT-23-5	U1, U8	LMV331IDBV	Texas Instruments
93	1	IC DRIVER LOW SIDE 1.5A SOT23-5	U2	IRS44273LTRPBF	Diodes Incorporated
94	1	IC REG LINEAR 3.3V 1A SOT223-4	U3	IFX1117MEV33HTMA1	Infineon Technologies
95	1	IC CTLR QUASI-RES 12SOIC	U4	ICE5QR4770AGXUMA1	Infineon Technologies
96	1	OPTOISOLATOR 5KV TRANSISTOR 4SMD	U5	FOD817BSD	ON Semiconductor
97	1	IC VREF SHUNT ADJ SOT23-3	U6	TL431BSA-7	Diodes Incorporated
98	3	IC OPAMP GP 1 CIRCUIT SOT23-5	U7, U9, U11	OPA320AIDBVR	Texas Instruments
99	1	IC REG BUCK 5V 1.8A 8DSO-27	U10	IFX91041EJV50XUMA1	Infineon Technologies
100	1	DIODE ZENER 22V 500MW SOD123	ZD1	BZT52C22-7-F	Diodes Incorporated
101	1	IFPS MODULES 24MDIP	M1	IM564-X6D/IM564-X6DSXKMA1	Infineon Technologies
102	1	MOSFET N-CH 30V 2.7A SOT-23-3	Q1	IRLML2030TRPbF	Infineon Technologies

7 Reference

[1] Datasheet of Infineon CIPOS™ mini IPM IM564-X6D/IM564-X6DS

[2] Application Note AN2016-10 CIPOS Mini Technical Description

[3] AN2018-02 EVAL-M3-102T User manual

[4] MCEWizard User Guide

[5] MCEDesigner User Guide

Note: *All listed reference materials are available for download on Infineon's website www.infineon.com/. All the iMOTION MADK Evaluation board's User Manuals are available at www.infineon.com/MADK All the CIPOS™ IPM's Datasheets and documents are available at www.infineon.com/IPM.*

Attention: ***Infineon´s Product Registration is online now. Register your board and download more information.***

3 easy steps to register:

5. *Go to www.Infineon.com/ login to myinfineon*
6. *Click on "Product Registration"*
7. *Choose your board and enter board series number, download the related information package*

Revision history

Document version	Date of release	Description of changes
1.0	2019-09-17	First release
1.1	2019-12-09	Updated BOM List §6
1.2	2020-01-17	Updated BOM List §6
1.3	2020-02-16	Updated MCE Wizard & MCE Designer screenshot (V2.1.2.0)
1.4	2020-07-16	Update schematic and PCB layout for improve some issue of noise

Trademarks
All referenced product or service names and trademarks are the property of their respective owners.

Edition 2020-07-16

Published by

Infineon Technologies AG

81726 Munich, Germany

© 2020 Infineon Technologies AG. All Rights Reserved.

Do you have a question about this document?

Email: erratum@infineon.com

Document reference
AN2019-04

IMPORTANT NOTICE

The information contained in this application note is given as a hint for the implementation of the product only and shall in no event be regarded as a description or warranty of a certain functionality, condition or quality of the product. Before implementation of the product, the recipient of this application note must verify any function and other technical information given herein in the real application. Infineon Technologies hereby disclaims any and all warranties and liabilities of any kind (including without limitation warranties of non-infringement of intellectual property rights of any third party) with respect to any and all information given in this application note.

The data contained in this document is exclusively intended for technically trained staff. It is the responsibility of customer's technical departments to EVALuate the suitability of the product for the intended application and the completeness of the product information given in this document with respect to such application.

For further information on the product, technology delivery terms and conditions and prices please contact your nearest Infineon Technologies office (**www.infineon.com**).

WARNINGS

Due to technical requirements products may contain dangerous substances. For information on the types in question please contact your nearest Infineon Technologies office.

Except as otherwise explicitly approved by Infineon Technologies in a written document signed by authorized representatives of Infineon Technologies, Infineon Technologies' products may not be used in any applications where a failure of the product or any consequences of the use thereof can reasonably be expected to result in personal injury.